Classical Timing Belt Pulleys

Classical Timing Belt Pulleys have evenly spaced grooves cut in their periphery, to make correct, positive engagement with the mating teeth of the belt. Cross & Morse pulleys are manufactured with involute groove form to enable the teeth to enter and leave the pulley with negligible friction and minimum backlash.
Pulleys are available in a number of stock widths and large selection of numbers of teeth to provide maximum versatility in drive selection. Pulleys for 3/8″ pitch 'L', and 1/2″ pitch 'H', drives are available with pilot bore for reworking to customers requirements or with taper bush for the complete off the shelf drive. All pulleys are precision manufactured to close tolerances to ensure concentric running, and it is important when reworking stock pulleys to accurately locate on the outside diameter to maintain concentricity.
Pulleys of non-standard widths or numbers of teeth can be supplied to order, or alternately teeth can be cut on customers blanks. All pulleys are manufactured in good quality steel except for larger pulleys where cast iron is used (1/5″ pitch 'XL' are also available in aluminium. Generally pulleys up to 48 teeth are supplied with two flanges to retain the timing belt. These flanges are accurately machined, pressed onto the pulley bodies and retained by spin rivetting. Dimensions over and between flanges for standard pulleys are indicated below. The dimension over the flanges is generally the same as recommended width of tooth for unflanged pulleys.

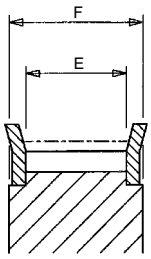

Belt Size	(1/5") XL	(3/8") L			(1/2") H			
Belt Width Ref.	XL037	L050	L075	L100	H100	H150	H200	H300
Belt Width	3/8"	1/2"	3/4"	1"	1"	1 1/2"	2"	3"
E	10.7	14.3	20.8	27.0	27.0	40.0	53.0	79.0
F min.	14.3	19.0	25.5	32.0	32.0	45.0	58.0	84.0

Standard Pulleys for XL (1/5" pitch) Belts

Pulley Types available in both steel and aluminium. For steel add 'C' to part number, for aluminium add 'L'.

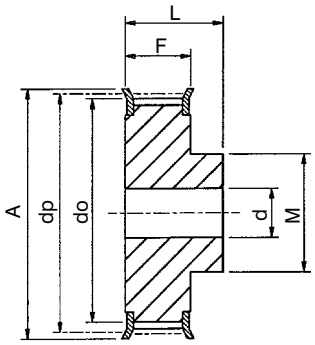

Type 1F

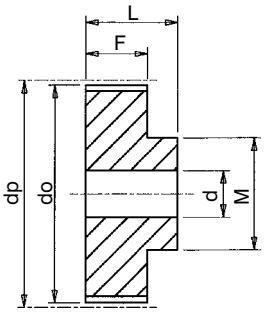

Type 1

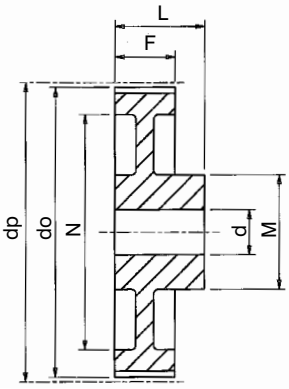

Type 2

Catalogue No.	No. Teeth Z	Pulley Type	Pitch Circle Dia. dp	Min. Bore d	Max. Bore d	Outside Diameter do	Flange Diameter A	Pulley Width F	Bore Length L	Hub Diameter M	Rim Diameter N	Approx Weight kg
1/5" Pitch Pulleys for 3/8" Wide Belts. Ref. XL037												
10XL037	10	1F	16.17	4.0	6	15.7	23	14.3	20.0	9.5	–	0.02
11XL037	11	1F	17.79	4.0	6	17.3	23	14.3	20.0	9.5	–	0.02
12XL037	12	1F	19.40	4.0	7	18.9	25	14.3	20.0	10.0	–	0.03
13XL037	13	1F	21.02	4.0	7	20.5	28	14.3	20.0	10.0	–	0.04
14XL037	14	1F	22.64	4.0	10	22.1	28	14.3	20.0	15.0	–	0.05
15XL037	15	1F	24.26	6.0	10	23.8	28	14.3	20.0	15.0	–	0.05
16XL037	16	1F	25.87	6.0	10	25.4	32	14.3	20.0	16.0	–	0.06
17XL037	17	1F	27.49	6.0	13	27.0	35	14.3	20.0	20.0	–	0.07
18XL037	18	1F	29.11	6.0	13	28.6	35	14.3	20.0	20.0	–	0.08
19XL037	19	1F	30.72	6.0	13	30.2	38	14.3	22.0	20.0	–	0.09
20XL037	20	1F	32.34	6.0	15	31.8	38	14.3	22.0	23.5	–	0.11
21XL037	21	1F	33.96	6.0	15	33.5	38	14.3	22.0	23.5	–	0.12
22XL037	22	1F	35.57	6.0	16	35.1	41	14.3	22.0	25.0	–	0.13
24XL037	24	1F	38.81	6.0	20	38.3	44	14.3	22.0	30.0	–	0.15
26XL037	26	1F	42.04	8.0	20	41.5	48	14.3	22.0	30.0	–	0.19
27XL037	27	1F	43.66	8.0	20	43.2	48	14.3	22.0	30.0	–	0.20
28XL037	28	1F	45.28	8.0	22	44.8	51	14.3	22.0	34.0	–	0.22
30XL037	30	1F	48.51	8.0	25	48.0	54	14.3	22.0	38.0	–	0.24
32XL037	32	1F	51.74	8.0	25	51.2	57	14.3	25.0	38.0	–	0.12
34XL037	34	1	54.98	8.0	29	54.5	–	14.3	25.0	45.0	–	0.12
35XL037	35	1	56.60	8.0	29	56.1	–	14.3	25.0	45.0	–	0.13
36XL037	36	1	58.21	8.0	29	57.7	–	14.3	25.0	45.0	–	0.14
38XL037	38	1	61.45	8.0	29	61.0	–	14.3	25.0	45.0	–	0.16
40XL037	40	1	64.68	8.0	29	64.2	–	14.3	25.0	45.0	–	0.17
42XL037	42	1	67.91	8.0	29	67.4	–	14.3	25.0	45.0	–	0.18
44XL037	44	1	71.15	8.0	29	70.6	–	14.3	25.0	45.0	–	0.19
48XL037	48	2	77.62	10.0	29	77.1	–	14.3	25.0	45.0	61	0.21
60XL037	60	2	97.02	10.0	29	96.5	–	14.3	25.0	45.0	80	0.25
72XL037	72	2	116.43	10.0	29	115.9	–	14.3	25.0	45.0	100	0.30

All dimensions in mm.

Tel +44 121 360 0155 Fax +44 121 325 1079 Email sales@crossmorse.com

Plain Bore Pulleys for 'L' Series Timing Belts

CROSS+MORSE

Catalogue No.	No. Teeth Z	Pulley Type	Pitch Circle Diameter dp	Min. Bore d	Max Bore d	Outside Diameter do	Flange Diameter A	Pulley Width F	Bore Length L	Hub Diameter M	Rim Diameter N	Approx. Weight kg
3/8" Pitch Pulleys for 1/2" wide Belts. Ref. L050												
P10L050	10	1F	30.32	8	13	29.6	37	19	28	20	–	0.12
P12L050	12	1F	36.38	8	15	35.6	43	19	30	24	–	0.16
P13L050	13	1F	39.41	8	19	38.7	44	19	30	28	–	0.19
P14L050	14	1F	42.45	8	19	41.7	48	19	30	28	–	0.22
P15L050	15	1F	45.48	8	23	44.7	51	19	30	34	–	0.29
P16L050	16	1F	48.51	8	24	47.8	54	19	32	36	–	0.34
P17L050	17	1F	51.54	10	24	50.8	57	19	32	36	–	0.38
P18L050	18	1F	54.57	10	27	53.8	60	19	32	40	–	0.42
P19L050	19	1F	57.61	10	27	56.8	64	19	32	40	–	0.46
P20L050	20	1F	60.64	10	27	59.9	67	19	32	40	–	0.50
P21L050	21	1F	63.67	10	30	62.9	70	19	32	45	–	0.57
P22L050	22	1F	66.70	10	30	65.9	75	19	32	45	–	0.61
P23L050	23	1F	69.73	10	36	69.0	79	19	32	55	–	0.71
P24L050	24	1F	72.77	10	36	72.0	79	19	32	58	–	0.81
P25L050	25	1F	75.80	10	38	75.0	83	19	32	58	–	0.85
P26L050	26	1F	78.83	11	38	78.1	87	19	32	58	–	0.91
P27L050	27	1F	81.86	11	38	81.1	87	19	32	58	–	0.97
P28L050	28	1F	84.89	11	38	84.1	91	19	32	70	–	1.03
P30L050	30	1F	90.96	11	46	90.2	97	19	32	70	–	1.07
P32L050	32	1F	97.02	11	46	96.3	102	19	32	70	–	1.23
P36L050	36	1F	109.15	11	46	108.4	115	19	32	70	–	1.50
P40L050	40	2F	121.28	11	46	120.5	128	19	32	70	100	1.77
P44L050	44	2F	133.40	11	46	132.6	142	19	32	70	112	2.20
P48L050	48	2F	145.53	11	46	144.8	150	19	32	70	124	2.68
P60L050	60	2	181.91	14	45	181.2	–	19	42	75	160	3.10
P72L050	72	2	218.30	14	45	217.5	–	19	42	75	197	4.86
P84L050	84	2	254.68	14	45	253.9	–	19	42	75	233	5.00
P96L050	96	2	291.06	14	45	290.3	–	19	42	75	269	6.00
3/8" Pitch Pulleys for 3/4" wide Belts. Ref. L075												
P10L075	10	1F	30.32	8	13	29.6	37	25	38	20	–	0.18
P12L075	12	1F	36.38	8	15	35.6	43	25	38	24	–	0.22
P13L075	13	1F	39.41	8	19	38.7	44	25	38	28	–	0.25
P14L075	14	1F	42.45	11	19	41.7	48	25	38	28	–	0.27
P15L075	15	1F	45.48	11	23	44.7	51	25	38	34	–	0.34
P16L075	16	1F	48.51	11	24	47.8	54	25	38	36	–	0.43
P17L075	17	1F	51.54	11	27	50.8	57	25	38	36	–	0.47
P18L075	18	1F	54.57	11	27	53.8	60	25	38	40	–	0.51
P19L075	19	1F	57.61	11	27	56.8	64	25	38	40	–	0.55
P20L075	20	1F	60.64	11	30	59.9	67	25	38	40	–	0.59
P21L075	21	1F	63.67	11	30	62.9	70	25	38	45	–	0.64
P22L075	22	1F	66.70	11	30	65.9	75	25	38	45	–	0.77
P23L075	23	1F	69.73	11	36	69.0	79	25	38	55	–	0.85
P24L075	24	1F	72.77	11	36	72.0	79	25	38	55	–	0.97
P25L075	25	1F	75.80	11	38	75.0	83	25	38	58	–	1.02
P26L075	26	1F	78.83	11	38	78.1	87	25	38	58	–	1.08
P27L075	27	1F	81.86	11	38	81.1	87	25	38	58	–	1.18
P28L075	28	1F	84.89	11	38	84.1	91	25	38	58	–	1.20
P30L075	30	1F	90.96	11	46	90.2	97	25	38	70	–	1.37
P32L075	32	1F	97.02	11	46	96.3	102	25	38	70	–	1.54
P36L075	36	1F	109.15	11	46	108.4	115	25	38	70	–	1.89
P40L075	40	2F	121.28	11	46	120.5	128	25	38	70	100	2.35
P44L075	44	2F	133.40	11	46	132.6	142	25	38	70	112	2.75
P48L075	48	2F	145.53	11	46	144.8	150	25	38	70	124	3.19
P60L075	60	2	181.91	14	45	181.2	–	25	45	75	160	3.44
P72L075	72	2	218.30	14	45	217.5	–	25	45	75	197	4.58
P84L075	84	2	254.68	14	45	253.9	–	25	45	75	233	5.60
P96L075	96	2	291.06	14	45	290.3	–	25	45	75	269	7.00
3/8" Pitch Pulleys for 1" wide Belts. Ref. L100												
P10L100	10	1F	30.32	8	13	29.6	37	32	45	20	–	0.18
P12L100	12	1F	36.38	8	15	35.6	43	32	45	24	–	0.26
P13L100	13	1F	39.41	8	19	38.7	44	32	45	28	–	0.30
P14L100	14	1F	42.45	11	19	41.7	48	32	45	28	–	0.34
P15L100	15	1F	45.48	11	23	44.7	51	32	45	34	–	0.41
P16L100	16	1F	48.51	11	24	47.8	54	32	45	36	–	0.48
P17L100	17	1F	51.54	11	24	50.8	57	32	45	36	–	0.55
P18L100	18	1F	54.57	11	27	53.8	60	32	45	40	–	0.62
P19L100	19	1F	57.61	11	27	56.8	64	32	45	40	–	0.70
P20L100	20	1F	60.64	11	27	59.9	67	32	45	40	–	0.72
P21L100	21	1F	63.67	11	30	62.9	70	32	45	45	–	0.77
P22L100	22	1F	66.70	11	30	65.9	75	32	45	45	–	0.88
P23L100	23	1F	69.73	11	36	69.0	79	32	45	45	–	1.12
P24L100	24	1F	72.77	11	36	72.0	79	32	45	55	–	1.16
P25L100	25	1F	75.80	11	38	75.0	83	32	45	58	–	1.18
P26L100	26	1F	78.83	11	38	78.1	87	32	45	58	–	1.24
P27L100	27	1F	81.86	11	38	81.1	87	32	45	58	–	1.35
P28L100	28	1F	84.89	11	38	84.1	91	32	45	58	–	1.42
P30L100	30	1F	90.96	11	46	90.2	97	32	45	70	–	1.61
P32L100	32	1F	97.02	11	46	96.3	102	32	45	70	–	1.84
P36L100	36	1F	109.15	11	46	108.4	115	32	45	70	–	2.32
P40L100	40	2F	121.28	11	46	120.5	128	32	45	70	100	2.86
P44L100	44	2F	133.40	11	46	132.6	142	32	45	70	112	3.36
P48L100	48	2F	145.53	11	46	144.8	150	32	45	70	124	3.86
P60L100	60	2	181.91	14	45	181.2	–	32	50	75	160	3.55
P72L100	72	2	218.30	14	45	217.5	–	32	50	75	197	5.00
P84L100	84	2	254.68	14	45	253.9	–	32	50	75	233	6.30
P96L100	96	2	291.06	14	45	290.3	–	32	50	75	269	8.20

Pulley Types

The Pulley types referred to in tables are as drawings below. Suffix 'F' indicates pulley has flanges. Pulley below dividing line in tables are manufactured in cast iron.
Std. Pulleys can be reworked to customers bore and keyway requirements.

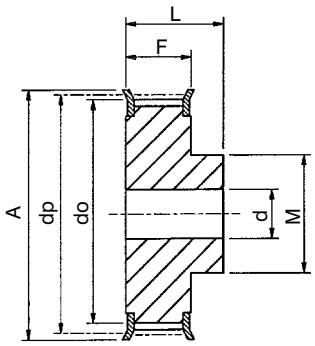

Type 1F
Material: Steel

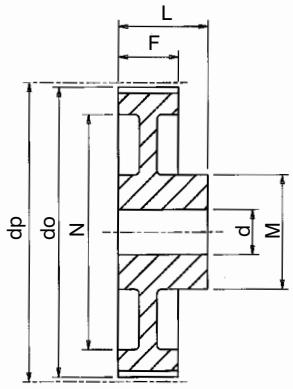

Type 2
Material: Cast Iron
Webs have lightening holes

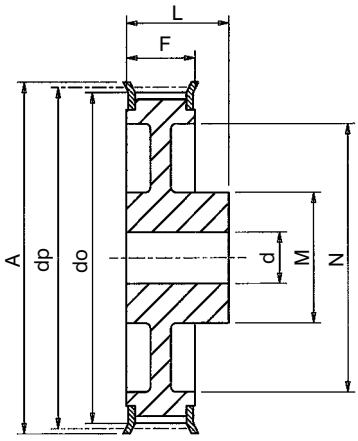

Type 2F
Material: Cast Iron
Webs have lightening holes

All dimensions in mm. Other sizes of Pulleys can be supplied on short delivery. All Pulleys can be supplied finish bored and keywayed. Parallel bore pulleys can be machined and fitted with bearings for idler pulleys. When using pulleys as inside idlers it is recommended that number of teeth of idler should be more than that of smaller drive pulley.

Tel +44 121 360 0155 Fax +44 121 325 1079 Email sales@crossmorse.com

Plain Bore Pulleys for 'H' Series Timing Belts

CROSS+MORSE

Pulley Types

The pulley types referred to in tables are as drawings below. The suffix 'F' indicates pulley has flanges.

Pulleys below dividing line in tables are in Cast iron, and of spoked design.
Std. Pulleys can be reworked to customers bore and keyway.

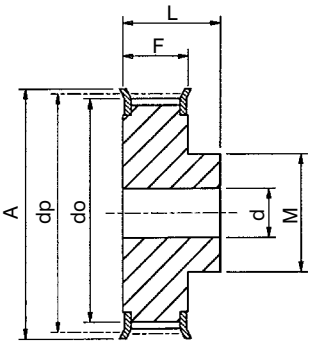

Type 1F
Material: Steel

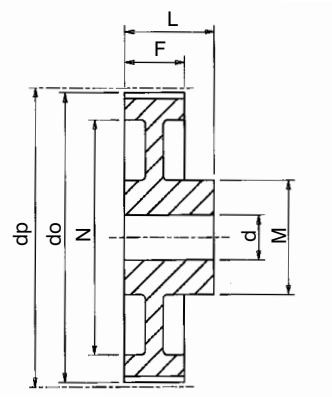

Type 2
Material: Cast Iron

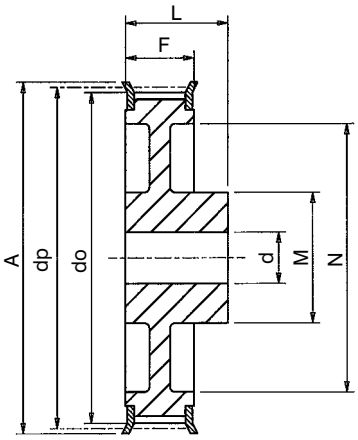

Type 2F
Material: Cast Iron

Catalogue No.	No. Teeth Z	Pulley Type	Pitch Circle Dia. dp	Min. Bore d	Max. Bore d	Outside Diameter do	Flange Diameter A	Pulley Width F	Bore Length L	Hub Diameter M	Rim Diameter N	Approx Weight kg
1/2" Pitch Pulleys for 1" Wide Belts. Ref. H100												
P14H100	14	1F	56.60	11	30	55.2	64	32	45	45	–	0.67
P16H100	16	1F	64.68	11	30	63.3	70	32	45	45	–	0.88
P18H100	18	1F	72.77	12	36	71.4	79	32	45	55	–	1.06
P19H100	19	1F	76.81	14	40	75.4	83	32	45	60	–	1.23
P20H100	20	1F	80.85	14	41	79.5	87	32	45	62	–	1.33
P21H100	21	1F	84.89	14	43	83.5	91	32	45	65	–	1.43
P22H100	22	1F	88.94	14	45	87.6	93	32	45	68	–	1.63
P24H100	24	1F	97.02	14	47	95.7	102	32	45	72	–	1.95
P26H100	26	1F	105.11	14	54	103.7	112	32	45	80	–	2.30
P28H100	28	1F	113.19	14	54	111.8	120	32	45	80	–	2.53
P30H100	30	1F	121.28	14	54	119.9	128	32	45	80	–	2.93
P32H100	32	1F	129.36	14	54	128.0	135	32	45	80	–	3.06
P36H100	36	2F	145.53	14	48	144.2	150	32	45	80	118	3.92
P40H100	40	2F	161.70	14	48	160.3	168	32	45	80	134	4.95
P44H100	44	2F	177.87	14	48	176.5	184	32	50	80	150	6.20
P48H100	48	2F	194.04	14	54	192.7	200	32	50	90	166	5.30
P60H100	60	2	242.55	19	54	241.2	–	32	50	90	215	7.50
P72H100	72	2	291.06	19	62	289.7	–	32	55	100	263	9.00
P84H100	84	2	339.57	19	62	338.2	–	32	55	100	312	10.00
P96H100	96	2	388.08	19	70	386.7	–	32	60	120	360	13.80
P120H100	120	2	485.10	19	70	483.7	–	32	60	120	458	22.00
1/2" Pitch Pulleys for 1 1/2" Wide Belts. Ref. H150												
P14H150	14	1F	56.60	11	28	55.2	64	46	58	42	–	0.95
P16H150	16	1F	64.68	11	30	63.3	70	46	58	45	–	1.08
P18H150	18	1F	72.77	14	36	71.4	79	46	58	55	–	1.45
P19H150	19	1F	76.81	14	40	75.4	83	46	58	60	–	1.55
P20H150	20	1F	80.85	14	41	79.5	87	46	58	62	–	1.70
P21H150	21	1F	84.89	14	43	83.5	91	46	58	65	–	1.87
P22H150	22	1F	88.94	14	45	87.6	93	46	58	68	–	2.07
P24H150	24	1F	97.02	14	47	95.7	102	46	58	72	–	2.50
P26H150	26	1F	105.11	14	54	103.7	112	46	58	80	–	2.99
P28H150	28	1F	113.19	14	54	111.8	120	46	58	80	–	3.39
P30H150	30	1F	121.28	14	54	119.9	128	46	58	80	–	3.86
P32H150	32	1F	129.36	14	54	128.0	135	46	58	80	–	4.37
P36H150	36	2F	145.53	14	48	144.2	150	46	58	80	118	5.50
P40H150	40	2F	161.70	14	48	160.3	168	46	58	80	134	6.80
P44H150	44	2F	177.87	19	48	176.5	184	46	58	80	150	8.50
P48H150	48	2F	194.04	19	54	192.7	200	46	65	90	166	8.80
P60H150	60	2	242.55	19	54	241.2	–	46	65	90	215	9.00
P72H150	72	2	291.06	24	62	289.7	–	46	65	100	263	11.00
P84H150	84	2	339.57	24	62	338.2	–	46	65	100	312	13.00
P96H150	96	2	388.08	24	70	386.7	–	46	65	120	360	17.00
P120H150	120	2	485.10	24	70	483.7	–	46	65	120	458	25.00
1/2" Pitch Pulleys for 2" Wide Belts. Ref. H200												
P14H200	14	1F	56.60	11	28	55.2	64	59	70	42	–	1.10
P16H200	16	1F	64.68	11	30	63.3	70	59	70	45	–	1.34
P18H200	18	1F	72.77	14	36	71.4	79	59	70	55	–	1.65
P19H200	19	1F	76.81	14	40	75.4	83	59	70	60	–	1.90
P20H200	20	1F	80.85	14	41	79.5	87	59	70	62	–	2.11
P21H200	21	1F	84.89	14	43	83.5	91	59	70	65	–	2.23
P22H200	22	1F	88.94	14	45	87.6	93	59	70	68	–	2.45
P24H200	24	1F	97.02	14	47	95.7	102	59	70	72	–	2.97
P26H200	26	1F	105.11	14	54	103.7	112	59	70	80	–	3.61
P28H200	28	1F	113.19	14	54	111.8	120	59	70	80	–	4.10
P30H200	30	1F	121.28	14	54	119.9	128	59	70	80	–	4.74
P32H200	32	1F	129.36	14	54	128.0	135	59	70	80	–	5.60
P36H200	36	2F	145.53	14	48	144.2	150	59	70	80	118	7.10
P40H200	40	2F	161.70	14	48	160.3	168	59	70	80	134	8.40
P44H200	44	2F	177.87	19	48	176.5	184	59	70	80	150	10.50
P48H200	48	2F	194.04	24	54	192.7	200	59	75	90	166	8.60
P60H200	60	2	242.55	24	54	241.2	–	59	75	90	215	11.00
P72H200	72	2	291.06	28	62	289.7	–	59	75	100	263	14.00
P84H200	84	2	339.57	28	62	338.2	–	59	75	100	312	15.00
P96H200	96	2	388.08	28	70	386.7	–	59	75	120	360	20.30
P120H200	120	2	485.10	28	70	483.7	–	59	75	120	458	28.00
1/2" Pitch Pulleys for 3" Wide Belts. Ref. H300												
P14H300	14	1F	56.60	11	28	55.2	64	86	100	42	–	1.40
P16H300	16	1F	64.68	11	30	63.3	70	86	100	45	–	1.89
P18H300	18	1F	72.77	19	36	71.4	79	86	100	55	–	2.38
P19H300	19	1F	76.81	19	40	75.4	83	86	100	60	–	2.60
P20H300	20	1F	80.85	19	41	79.5	87	86	100	62	–	3.10
P21H300	21	1F	84.89	19	43	83.5	91	86	100	65	–	3.32
P22H300	22	1F	88.94	19	45	87.6	93	86	100	68	–	3.67
P24H300	24	1F	97.02	19	47	95.7	102	86	100	72	–	4.40
P26H300	26	1F	105.11	19	54	103.7	112	86	100	80	–	5.20
P28H300	28	1F	113.19	19	54	111.8	120	86	100	80	–	5.60
P30H300	30	1F	121.28	19	54	119.9	128	86	100	80	–	7.00
P32H300	32	1F	129.36	19	54	128.0	135	86	100	80	–	7.80
P36H300	36	2F	145.53	19	48	144.2	150	86	100	80	118	9.90
P40H300	40	2F	161.70	19	48	160.3	168	86	100	80	134	12.20
P44H300	44	2	177.87	24	48	176.5	–	86	100	80	150	15.00
P48H300	48	2	194.04	24	54	192.7	–	86	100	90	166	11.40
P60H300	60	2	242.55	24	54	241.2	–	86	100	90	215	13.30
P72H300	72	2	291.06	28	62	289.7	–	86	100	100	263	19.00
P84H300	84	2	339.57	28	62	338.2	–	86	100	100	312	20.00
P96H300	96	2	388.08	28	70	386.7	–	86	100	120	360	27.00
P120H300	120	2	485.10	28	70	483.7		86	100	120	458	33.00

Other sizes of Pulleys can be supplied on short delivery.
All Pulleys can be supplied finish bored and keywayed.

All dimensions in mm.

Tel +44 121 360 0155 Fax +44 121 325 1079 Email sales@crossmorse.com

Taper Bore Pulleys for 'L' Series Timing Belts

Catalogue No.	No. Teeth Z	Pulley Type	Pitch Circle Diameter dp	Taper Bush Size	Max Bore d	Outside Diameter do	Flange Diameter A	Pulley Width F	Bore Length L	Hub Diameter M	Rim Diameter N	Approx. Weight kg
3/8" Pitch Pulleys for 1/2" wide Belts. Ref. L050												
18L050	18	8F	54.57	1108	28	53.8	60	19	22	45	–	0.17
19L050	19	8F	57.61	1108	28	56.8	64	19	22	45	–	0.20
20L050	20	8F	60.64	1108	28	59.9	67	19	22	48	–	0.23
21L050	21	8F	63.67	1108	28	62.9	70	19	22	48	–	0.30
22L050	22	8F	66.70	1108	28	65.9	75	19	22	51	–	0.36
23L050	23	8F	69.73	1108	28	69.0	79	19	22	54	–	0.41
24L050	24	8F	72.77	1108	28	72.0	79	19	22	54	–	0.45
25L050	25	8F	75.80	1108	28	75.0	83	19	22	56	–	0.50
26L050	26	8F	78.83	1108	28	78.1	86	19	22	60	–	0.55
27L050	27	8F	81.86	1108	28	81.1	86	19	22	62	–	0.61
28L050	28	8F	84.89	1108	28	84.1	91	19	22	65	–	0.68
30L050	30	8F	90.96	1108	28	90.2	97	19	22	70	–	0.82
32L050	32	8F	97.02	1108	28	96.3	102	19	22	74	–	0.98
36L050	36	8F	109.15	1108	28	108.4	115	19	22	85	–	1.38
40L050	40	8F	121.28	1610	42	120.5	128	19	25	88	–	1.75
48L050	48	11F	145.53	1610	42	144.8	150	19	25	88	120	1.76
60L050	60	7	181.91	1610	42	181.2	–	19	25	92	166	2.18
72L050	72	7	218.30	1610	42	217.5	–	19	25	92	202	3.00
84L050	84	7	254.68	1610	42	253.9	–	19	25	92	236	4.00
96L050	96	7	291.06	2012	50	290.3	–	19	32	106	270	5.50
120L050	120	7	363.83	2012	50	363.1	–	19	32	106	343	6.80
3/8" Pitch Pulleys for 3/4" wide Belts. Ref. L075												
18L075	18	9F	54.57	1108	28	53.8	60	25	25	–	–	0.24
19L075	19	9F	57.61	1108	28	56.8	64	25	25	–	–	0.28
20L075	20	9F	60.64	1108	28	59.9	67	25	25	–	–	0.33
21L075	21	9F	63.67	1108	28	62.9	70	25	25	–	–	0.38
22L075	22	9F	66.70	1108	28	65.9	75	25	25	–	–	0.45
23L075	23	9F	69.73	1108	28	69.0	79	25	25	–	–	0.52
24L075	24	9F	72.77	1108	28	72.0	79	25	25	–	–	0.58
25L075	25	9F	75.80	1108	28	75.0	83	25	25	–	–	0.64
26L075	26	9F	78.83	1108	28	78.1	86	25	25	–	–	0.71
27L075	27	9F	81.86	1108	28	81.1	86	25	25	–	–	0.79
28L075	28	9F	84.89	1108	28	84.1	91	25	25	–	–	0.86
30L075	30	9F	90.96	1108	28	90.2	97	25	25	–	–	1.04
32L075	32	9F	97.02	1108	28	96.3	102	25	25	–	–	1.21
36L075	36	9F	109.15	1610	42	108.4	115	25	25	–	–	1.41
40L075	40	9F	121.28	1610	42	120.5	128	25	25	–	–	1.86
48L075	48	10F	145.53	1610	42	144.8	150	25	25	92	120	2.50
60L075	60	10	181.91	1610	42	181.2	–	25	25	92	166	3.00
72L075	72	10	218.30	1610	42	217.5	–	25	25	92	202	4.00
84L075	84	7	254.68	2012	50	253.9	–	25	32	92	236	5.20
96L075	96	7	291.06	2012	50	290.3	–	25	32	106	270	6.50
120L075	120	7	363.83	2012	50	363.1	–	25	32	106	343	7.60
3/8" Pitch Pulleys for 1" wide Belts. Ref. L100												
18L100	18	5F	54.57	1108	28	53.8	60	31	22	–	38	0.25
19L100	19	5F	57.61	1108	28	56.8	64	31	22	–	38	0.31
20L100	20	5F	60.64	1108	28	59.9	67	31	22	–	45	0.36
21L100	21	5F	63.67	1108	28	62.9	70	31	22	–	45	0.41
22L100	22	5F	66.70	1108	28	65.9	75	31	22	–	48	0.47
23L100	23	5F	69.73	1108	28	69.0	79	32	22	–	52	0.53
24L100	24	5F	72.77	1108	28	72.0	79	32	22	–	52	0.60
25L100	25	5F	75.80	1108	28	75.0	83	32	22	–	54	0.67
26L100	26	5F	78.83	1108	28	78.1	86	32	22	–	60	0.73
27L100	27	5F	81.86	1108	28	81.1	86	32	22	–	60	0.80
28L100	28	5F	84.89	1108	28	84.1	91	32	22	–	65	0.87
30L100	30	5F	90.96	1210	32	90.2	97	32	25	–	71	0.98
32L100	32	5F	97.02	1210	32	96.3	102	32	25	–	75	1.18
36L100	36	5F	109.15	1610	42	108.4	115	32	25	–	86	1.42
40L100	40	5F	121.28	1610	42	120.5	128	32	25	–	96	1.70
48L100	48	14F	145.53	1610	42	144.8	150	32	25	92	120	2.70
60L100	60	12	181.91	1610	42	181.2	–	32	25	92	166	2.40
72L100	72	10	218.30	2012	50	217.5	–	32	32	92	202	4.40
84L100	84	10	254.68	2012	50	253.9	–	32	32	92	236	6.00
96L100	96	10	291.06	2012	50	290.3	–	32	32	106	270	7.10
120L100	120	10	363.83	2012	50	363.1	–	32	32	106	343	8.50

All dimensions in mm. For Taper Bush dimensions refer page 25.

Pulley Types

Pulley types referred to in tables are as drawings below. The suffix 'F' indicates pulley has flanges. Pulleys below dividing line in tables are manufactured in cast iron. Types 7, 10 & 12 when in cast iron have lightening holes.

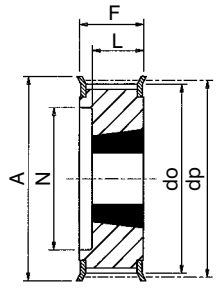

Type 5F

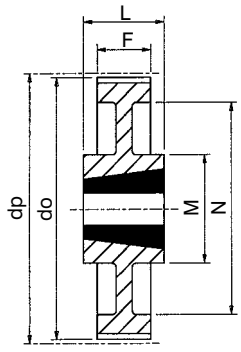

Type 7

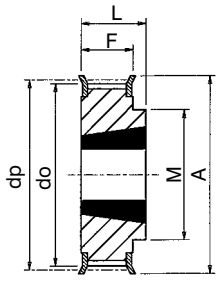

Type 8F

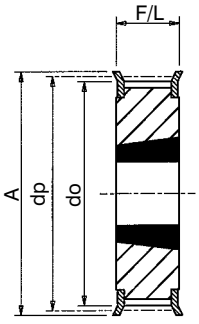

Type 9F

Pulley Installation

Correct and accurate installation of Timing Drives is essential. Pulley alignment and shaft parallelism is very important as misalignment of the drive will cause unequal loading across the belt width and edge wear of belt on flanges. Pulley alignment can be checked by placing a straight edge against the outside edge of the pulleys and adjusting so contact made evenly across both pulleys.
The shaft should be located within a rigid framework, as any distortion under load could result in a reduction of centre distance which will cause jumping of belt on pulley teeth. If idlers are used they must be locked firmly into position after correct belt tensioning.
Refer to page 10 for additional information on drive installation.

Tel +44 121 360 0155 Fax +44 121 325 1079 Email sales@crossmorse.com

Taper Bore Pulleys for 'H' Series Timing Belts

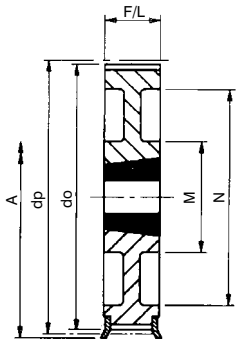

Types 10/10F

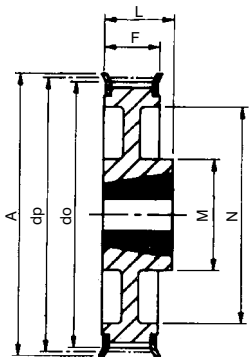

Type 11F

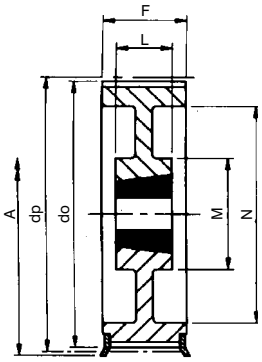

Type 12/12F

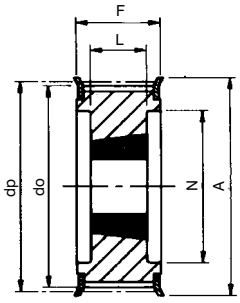

Type 13F

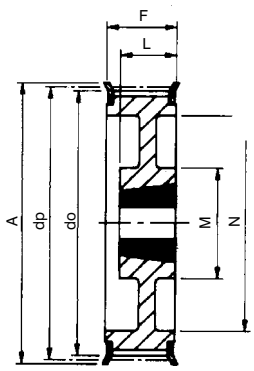

Type 17F

Catalogue No.	No. Teeth Z	Pulley Type	Pitch Circle Diameter dp	Taper Bush Size	Max Bore	Outside Diameter do	Flange Diameter A	Pulley Width F	Bore Length L	Hub Diameter M	Rim Diameter N	Approx. Weight kg
½" Pitch Pulleys for 1" wide Belts. Ref. H100												
16H100	16	5F	64.68	1108	28	63.3	70	31	22	–	45	0.88
18H100	18	5F	72.77	1210	32	71.4	79	31	25	–	52	1.06
19H100	19	5F	76.81	1210	32	75.4	83	31	25	–	56	1.23
20H100	20	5F	80.55	1210	32	79.5	87	31	25	–	60	1.33
21H100	21	5F	84.89	1210	32	83.5	91	32	25	–	64	1.43
22H100	22	5F	88.94	1210	32	87.6	93	32	25	–	67	1.63
23H100	23	5F	92.98	1610	42	91.6	97	32	25	–	70	1.85
24H100	24	5F	97.02	1610	42	95.7	102	32	25	–	74	1.93
25H100	25	5F	101.06	1610	42	99.7	106	32	25	–	77	2.07
26H100	26	5F	105.11	1610	42	103.7	112	32	25	–	82	2.30
27H100	27	5F	109.15	1610	42	107.8	115	32	25	–	85	2.40
28H100	28	5F	113.19	1610	42	111.8	120	32	25	–	90	2.53
30H100	30	5F	121.28	1610	42	119.9	128	32	25	–	98	2.93
32H100	32	17F	129.36	1610	42	128.0	135	32	25	80	106	3.06
36H100	36	17F	145.53	1610	42	144.2	150	32	25	92	121	3.92
40H100	40	17F	161.70	1610	42	160.3	168	32	25	92	138	4.95
44H100	44	10F	177.87	2012	50	176.5	184	32	32	106	152	6.20
48H100	48	10F	194.04	2012	50	192.7	200	32	32	106	169	5.30
60H100	60	12	242.55	2012	50	241.2	–	34	32	92	223	7.50
72H100	72	12	291.06	2012	50	289.7	–	34	32	92	270	9.00
84H100	84	12	339.57	2012	50	338.2	–	34	32	92	318	10.00
96H100	96	7	388.08	2517	60	386.7	–	34	45	106	366	13.80
120H100	120	7	485.10	2517	60	483.7	–	34	45	106	462	22.00
½" Pitch Pulleys for 1½" wide Belts. Ref. H150												
18H150	18	5F	72.77	1210	32	71.4	79	45	25	–	52	1.45
19H150	19	5F	76.81	1210	32	75.4	83	45	25	–	56	1.55
20H150	20	5F	80.55	1210	32	79.5	87	45	25	–	60	1.70
21H150	21	5F	84.89	1210	32	83.5	91	45	25	–	64	1.87
22H150	22	5F	88.94	1210	32	87.6	93	45	25	–	67	2.07
23H150	23	5F	92.98	1610	42	91.6	97	45	25	–	70	2.28
24H150	24	5F	97.02	1610	42	95.7	102	45	25	–	74	2.50
25H150	25	5F	101.06	1610	42	99.7	106	45	25	–	77	2.71
26H150	26	5F	105.11	1610	42	103.7	112	45	25	–	82	2.99
27H150	27	5F	109.15	1610	42	107.8	115	45	25	–	85	3.15
28H150	28	5F	113.19	1610	42	111.8	120	45	25	–	90	3.39
30H150	30	5F	121.28	1610	42	119.9	128	45	25	–	98	3.86
32H150	32	17F	129.36	1610	42	128.0	135	45	25	80	106	4.37
36H150	36	17F	145.53	1610	42	144.2	150	45	25	92	121	5.50
40H150	40	17F	161.70	1610	42	160.3	168	45	25	92	138	6.80
44H150	44	17F	177.87	2012	50	176.5	184	45	32	106	152	8.50
48H150	48	17F	194.04	2012	50	192.7	200	45	32	106	169	8.80
60H150	60	12	242.55	2012	50	241.2	–	46	32	92	223	9.00
72H150	72	12	291.06	2012	50	289.7	–	46	32	92	270	11.00
84H150	84	12	339.57	2012	50	338.2	–	46	32	92	320	13.00
96H150	96	12	388.08	2517	60	386.7	–	46	45	106	366	17.00
120H150	120	12	485.10	2517	60	483.7	–	46	45	106	462	25.00
½" Pitch Pulleys for 2" wide Belts. Ref. H200												
18H200	18	5F	72.77	1210	32	71.4	79	58	25	–	52	1.65
19H200	19	5F	76.81	1210	32	75.4	83	58	25	–	56	1.90
20H200	20	5F	80.55	1610	42	79.5	87	58	25	–	60	2.11
21H200	21	5F	84.89	1610	42	83.5	91	58	25	–	64	2.23
22H200	22	5F	88.94	1610	42	87.6	93	58	25	–	67	2.45
23H200	23	5F	92.98	1610	42	91.6	97	58	25	–	70	2.71
24H200	24	5F	97.02	1610	42	95.7	102	58	25	–	74	2.97
25H200	25	5F	101.06	1610	42	99.7	106	58	25	–	77	3.32
26H200	26	5F	105.11	1610	42	103.7	112	58	25	–	82	3.61
27H200	27	5F	109.15	1610	42	107.8	115	58	25	–	85	3.90
28H200	28	5F	113.19	1610	42	111.8	120	58	25	–	90	4.10
30H200	30	5F	121.28	1610	42	119.9	128	58	25	–	98	4.74
32H200	32	5F	129.36	2012	50	128.0	135	58	32	–	106	5.60
36H200	36	17F	145.53	2012	50	144.2	150	58	32	102	121	7.10
40H200	40	17F	161.70	2012	50	160.3	168	58	32	106	140	8.40
44H200	44	17F	177.87	2012	50	176.5	184	58	32	106	150	10.50
48H200	48	17F	194.04	2517	60	192.7	200	58	45	119	168	8.60
60H200	60	12	242.55	2517	60	241.2	–	60	45	119	223	11.00
72H200	72	12	291.06	2517	60	289.7	–	60	45	119	270	14.00
84H200	84	12	339.57	2517	60	338.2	–	60	45	119	318	15.00
96H200	96	12	388.08	2517	60	386.7	–	60	45	119	366	20.30
120H200	120	12	485.10	2517	60	483.7	–	60	45	119	462	28.00
½" Pitch Pulleys for 3" wide Belts. Ref. H300												
20H300	20	13F	80.55	1615	42	79.5	87	84	38	–	65	3.10
21H300	21	13F	84.89	1615	42	83.5	91	84	38	–	65	3.32
22H300	22	13F	88.94	1615	42	87.6	93	84	38	–	67	3.67
23H300	23	13F	92.98	1615	42	91.6	97	84	38	–	70	4.00
24H300	24	13F	97.02	1615	42	95.7	102	84	38	–	74	4.40
25H300	25	13F	101.06	1615	42	99.7	106	84	38	–	77	4.79
26H300	26	13F	105.11	1615	42	103.7	112	84	38	–	82	5.20
27H300	27	13F	109.15	2012	50	107.8	115	84	32	–	85	5.40
28H300	28	13F	113.19	2012	50	111.8	120	84	32	–	90	5.60
30H300	30	13F	121.28	2012	50	119.9	128	84	32	–	98	7.00
32H300	32	13F	129.36	2517	60	128.0	135	84	45	–	106	7.80
36H300	36	13F	145.53	2517	60	144.2	150	84	45	–	121	9.90
40H300	40	13F	161.70	2517	60	160.3	168	84	45	119	138	12.20
48H300	48	12F	194.04	2517	60	192.7	200	86	45	119	168	11.40
60H300	60	12	242.55	2517	60	241.2	–	86	45	119	223	13.30
72H300	72	12	291.06	2517	60	289.7	–	86	45	119	270	19.00
84H300	84	12	339.57	2517	60	338.2	–	86	45	119	318	20.00
96H300	96	12	388.08	3030	75	386.7	–	86	76	150	366	27.00
120H300	120	12	485.10	3030	75	483.7	–	86	76	150	462	33.00

All dimensions in mm. For details of Taper Bushes refer to page 25.

Tel +44 121 360 0155 Fax +44 121 325 1079 Email sales@crossmorse.com