Bonfiglioli
Vectron

S2U

Operating Instructions

Bonfiglioli
power, control and green solutions

S2U

Table of Contents

Chapter 0	**Preface**	0-1
	0.1 Preface	0-1
Chapter 1	**Safety Precautions**	1-1
	1.1 Before Power UP	1-1
	1.2 During Power UP	1-2
	1.3 Before Operation	1-2
	1.4 During Operation	1-3
	1.5 Inverter Disposal	1-3
Chapter 2	**Part Number Definition**	2-1
	2.1 Model part number	2-1
	2.2 Standard Product Specification	2-2
Chapter 3	**Environment & Installation**	3-1
	3.1 Environment	3-1
	3.2 Installation	3-2
	3.2.1 Installation methods	3-2
	3.2.2 Installation space	3-4
	3.2.3 Derate curve	3-5
	3.3 Wiring guidelines	3-6
	3.3.1 Power cables	3-6
	3.3.2 Control cable selection and wiring	3-7
	3.3.3 Wiring and EMC guidelines	3-8
	3.3.4 Failure liability	3-9
	3.3.5 Considerations for peripheral equipment	3-10
	3.3.6 Ground connection	3-11
	3.3.7 Inverter exterior	3-11
	3.4 Specifications	3-12
	3.4.1 Product Specifications	3-12
	3.4.2 General Specifications	3-13
	3.5 Standard wiring	3-15
	3.5.1 Single phase (PNP input)	3-15
	3.6 Terminal Description	3-16
	3.6.1 Description of main circuit terminals	3-16
	3.6.2 Control circuit terminal description	3-17
	3.7 Outline Dimensions	3-18
	3.8 EMC filter Disconnection	3-20
Chapter 4	**Software Index**	4-1
	4.1 Keypad Description	4-1
	4.1.1 Operator Panel Functions	4-1
	4.1.2 Digital Display Description	4-2
	4.1.3 Digital Display Setup	4-4
	4.1.4 Example of Keypad Operation	4-6
	4.1.5 Operation Control	4-8
	4.2 Programmable Parameter Groups	4-9

	4.3 Parameter Function Description	4-24
Chapter 5	**Troubleshooting and Maintenance**	5-1
	5.1 Error Display and Corrective Action	5-1
	5.1.1 Manual Reset and Auto-Reset	5-1
	5.1.2 Keypad Operation Error Instruction	5-2
	5.1.3 Special conditions	5-3
	5.2 General troubleshooting	5-4
	5.3 Routine and periodic inspection	5-5
	5.4 Maintenance	5-6
Chapter 6	**Peripheral Components**	6-1
	6.1 Reactor Specifications	6-1
	6.2 Fuse Specification	6-1
	6.3 Fuse Specification (UL Model Recommended)	6-1
Appendix I	**S2U Parameters Setting List**	App1-1

Chapter 0 Preface

0.1 Preface

To extend the performance of the product and ensure personnel safety, please read this manual thoroughly before using the inverter. Should there be any problem in using the product that cannot be solved with the information provided in the manual, contact our technical or sales representative who will be willing to help you.

※Precautions

The inverter is an electrical product. For your safety, there are symbols such as “Danger”, “Caution” in this manual as a reminder to pay attention to safety instructions on handling, installing, operating, and checking the inverter. Be sure to follow the instructions for highest safety.

Danger	Indicates a potential hazard that could cause death or serious personal injury if misused.
⚠ Caution	Indicates that the inverter or the mechanical system might be damaged if misused.

Danger
➢ Risk of electric shock. The DC link capacitors remain charged for five minutes after power has been removed. It is not permissible to open the equipment until 5 minutes after the power has been removed. ➢ Do not make any connections when the inverter is powered on. Do not check parts and signals on circuit boards during the inverter operation. ➢ Do not disassemble the inverter or modify any internal wires, circuits, or parts. ➢ Ensure that the Inveter Ground terminal is connected correctly.

⚠ Caution
➢ Do not perform a voltage test on parts inside the inverter. High voltage can destroy the semiconductor components. ➢ Do not connect U, V and W terminals of the inverter to any AC input power supply. ➢ CMOS ICs on the inverter’s main board are susceptible to static electricity. Do not touch the main circuit board.

Chapter 1 Safety Precautions

1.1 Before Power Up

Danger

- Make sure the main circuit connections are correct. L1(L) and L3(N) are power-input terminals and must not be mistaken for U, V and W. Otherwise, inverter damage can result.

Caution

- The line voltage applied must comply with the inverter's specified input voltage. (See the nameplate)
- To avoid the front cover from disengaging, or other damage do not carry the inverter by its covers. Support the drive by the heat sink when transporting. Improper handling can damage the inverter or injure personnel and should be avoided.
- To avoid the risk of fire, do not install the inverter on a flammable object. Install on nonflammable objects such as metal.
- If several inverters are placed in the same control panel, provide heat removal means to maintain the temperature below 50° C to avoid overheat or fire.
- When disconnecting the remote keypad, turn the power off first to avoid any damage to the keypad or the inverter.

Warning

- This product is sold subject to EN 61800-3 and EN 61800-5-1.
  In a domestic environment this product may cause radio interference in which case the user may be required to apply corrective measures.

Caution

- Work on the device/system by unqualified personnel or failure to comply with warnings can result in severe personal injury or serious damage to material. Only suitably qualified personnel trained in the setup, installation, commissioning and operation of the product should carry out work on the device/system.
- Only permanently-wired input power connections are allowed.

Caution

- The control terminals meet the standards EN61800-5-1 (system voltage 300 V, overvoltage category 3).
- To ensure safe operation in accordance with EN61800-5-1 the tangibility of the control terminals must be excluded during operation.

1.2 During Power Up

Danger

- When the momentary power loss is longer than 2 seconds, the inverter will not have sufficient stored power for its control circuit. Therefore, when the power is re-applied, the run operation of the inverter will be based on the setup of following parameters:

  - Run Parameters 00-02 or 00-03 in Complete Parameter Set (F_10 in Simplified Parameter Set).
  - Direct Run On Power Up Parameter 07-04 in Complete Parameter Set (F_28 in Simplified Parameter Set).

  Note: the start operation will be regardless of the settings for parameters 07-00 / 07-01 / 07-02 in Complete Parameter Set (F_23 and F_24 in Simplified Parameter Set).

  Danger: Direct Run On Power Up.

  If Direct Run On Power Up is enabled and inverter is set to external run with the run FWD/REV switch closed then the inverter will restart.

  Danger

  Prior to use, ensure that all risks and safety implications are considered.

- When the momentary power loss ride through is selected and the power loss is short, the inverter will have sufficient stored power for its control circuits to function, therefore, if the power is resumed the inverter will automatically restart depending on the setup of Parameters 07-00 & 07-01 in Complete Parameter Set (F_23 in Simplified Parameter Set).

1.3 Before Operation

Caution

- Make sure the model and inverter capacity are the same as that set in parameter 13-00.

Note : On power up the supply voltage set in parameter 01-01 will flash on display for 2 seconds.

1.4 During Operation

Danger

- Do not connect or disconnect the motor during operation. Otherwise, It may cause the inverter to trip or damage the unit.

Danger

- To avoid electric shock, do not take the front cover off while power is on.
- The motor will restart automatically after stop when auto-restart function is enabled. In this case, care must be taken while working around the drive and associated equipment.
- The operation of the stop switch is different than that of the emergency stop switch. The stop switch has to be activated to be effective. Emergency stop has to be de-activated to become effective.

Caution

- Do not touch heat radiating components such as heat sinks and brake resistors.
- The inverter can drive the motor from low speed to high speed. Verify the allowable speed ranges of the motor and the associated machinery.
- Note the settings related to the braking unit.
- Risk of electric shock. The DC link capacitors remain charged for five minutes after power has been removed. It is not permissible to open the equipment until 5 minutes after the power has been removed.

Caution

- The Inverter should be used in environments with temperature range from (14 to 104°F) or (-10 to 40°C) and relative humidity of 95%.

Danger

- Make sure that the power is switched off before disassembling or checking any components.

1.5 Inverter Disposal

Caution

Please dispose of this unit with care as an industrial waste and according to your required local regulations.

- The capacitors of inverter main circuit and printed circuit board are considered as hazardous waste and must not be burnt.
- The Plastic enclosure and parts of the inverter such as the cover board will release harmful gases if burnt.

Chapter 2 Part Number Definition

2.1 Model part number

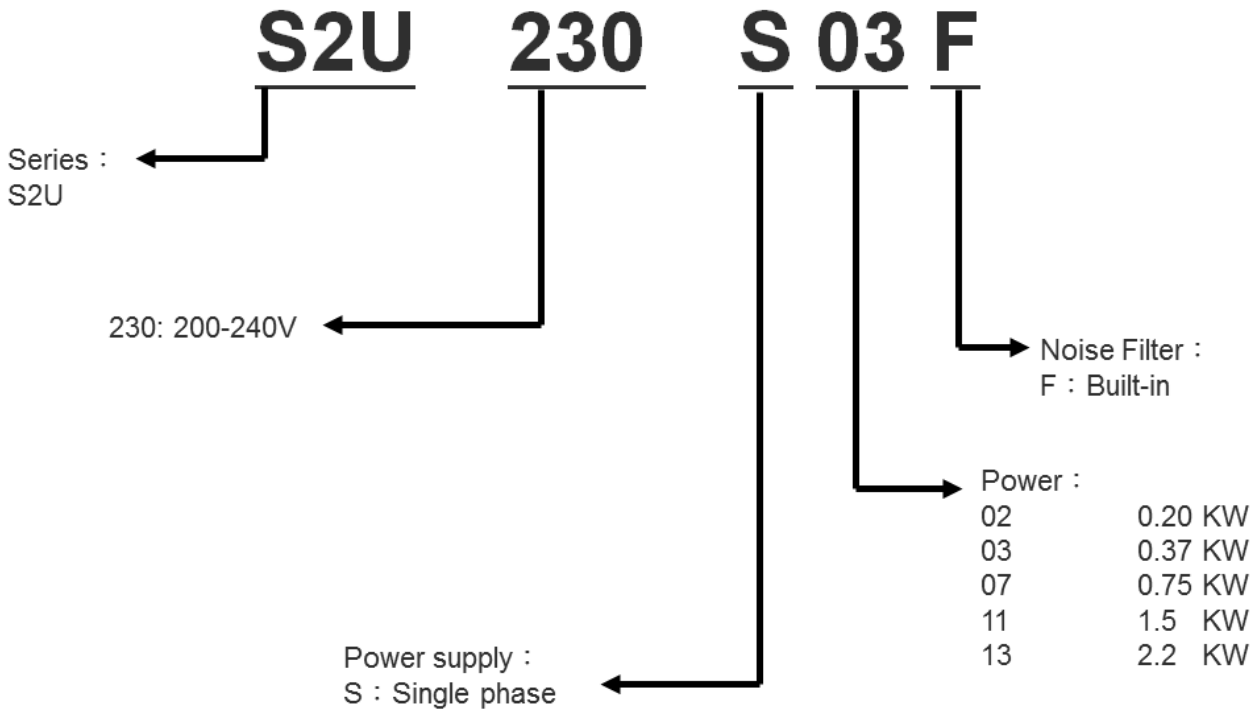

2.2 Standard Product Specification

Model	Supply Voltage (VAC)	Frequency (Hz)	(HP)	(KW)	Model		Filter	
					NPN	PNP	Built-in	None
S2U230S-02 F	1ph, 200~240V +10%/-15%	50/60Hz	0.25	0.2		◎	◎	
S2U230S-03 F			0.5	0.4		◎	◎	
S2U230S-07 F			1	0.75		◎	◎	
S2U230S-11 F			2	1.5		◎	◎	
S2U230S-13 F			3	2.2		◎	◎	

Suitable for use with a mains circuit capable of supplying not more than 5,000 rms symmetrical amperes.

Chapter 3 Environment & Installation

3.1 Environment

Installation environment has a direct effect on the correct operation and the life expectancy of the inverter, Install the inverter in an environment complying with the following conditions:

Protection	
Protection class	IP20, NEMA/UL Open Type
Suitable environment	
Operating temperature	-10 ~ 40°C (-10 ~ 50°C with fan) If several inverters are installed in the same control panel, ensure adequate spacing and provide the necessary cooling and ventilation for successful operation.
Storage temperature	-20 ~ 60°C
Relative Humidity	Max 95% (without condensation) Notice prevention of inverter freezing up.
Shock	1 G. (9.8 m/s²) for 20 Hz and below. 0.6 G (5.88 m/s²) from 20 Hz to 50Hz

Installation site

Install in an environment that will not have an adverse effect on the operation of the unit and ensure that there is no exposure to areas such as that listed below:-

- Direct sunlight, Rain or moisture
- Oil mist and salt
- Dust, lint fibbers, small metal filings and corrosive liquid and gas
- Electromagnetic interference from sources such as welding equipment
- Radioactive and flammable materials
- Excessive vibration from machines such as stamping, punching machines
- Add a vibration-proof pads if necessary

Tightening torque for terminals

Chart 3-1

Model	TM1					TM2				
	Cable Size		Tightening torque			Cable Size		Tightening torque		
	AWG	mm²	kgf.cm	lbf.in	Nm	AWG	mm²	kgf.cm	lbf.in	Nm
Frame1	22~10	0.34~6	14	12.15	1.37	24~12	0.25~4	4.08	3.54	0.4
Frame2			12.24	10.62	1.2					

3.2 Installation

3.2.1 Installation methods

Frame1: Mounting on a flat surface

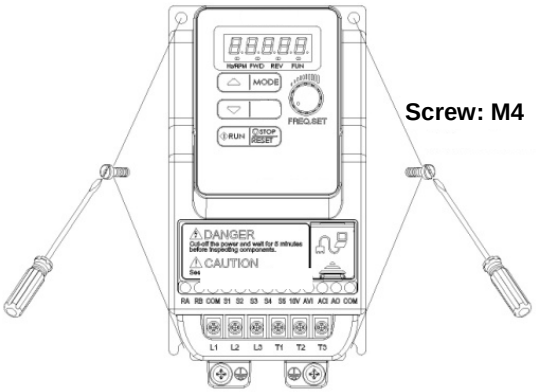

Din rail type installation：

Din rail kit includes a plastic and a metal adaptor plates.

Assembly Steps:

1) Attach the metal adaptor plate to the inverter base with the screws provided.
2) Attach the plastic Din rail adaptor to the metal adaptor plate.
3) Push the plastic adaptor forward to lock into position.

Disassembly Steps:

1) Unlock by pushing the snap hooks
2) Retract and remove the plastic Din rail adaptor.
3) Unscrew the metal plate &Remove

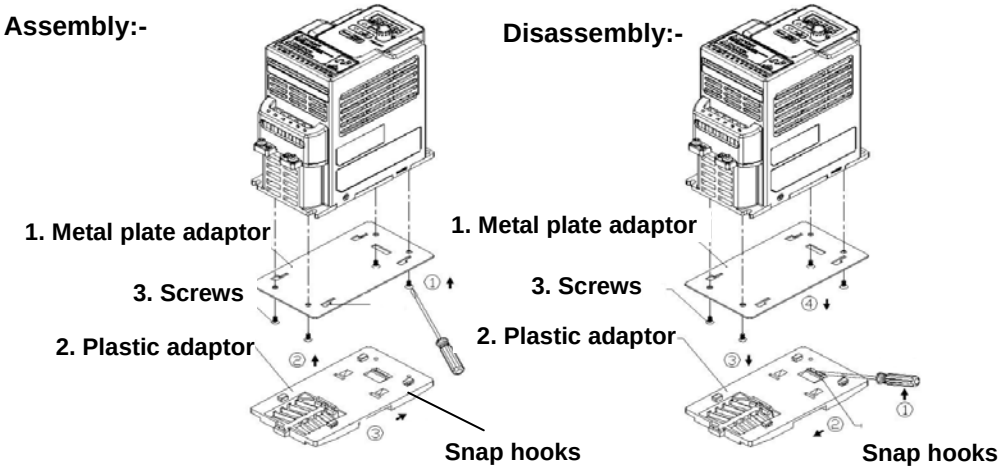

Note：

JN5-DIN-L01 (Frame 1 Din rail kit part number), including the following parts

1. Metal plate adaptor

2. Plastic adaptor

3. Chamfer head screw: M3×6

Frame 2: Mounting on a flat surface

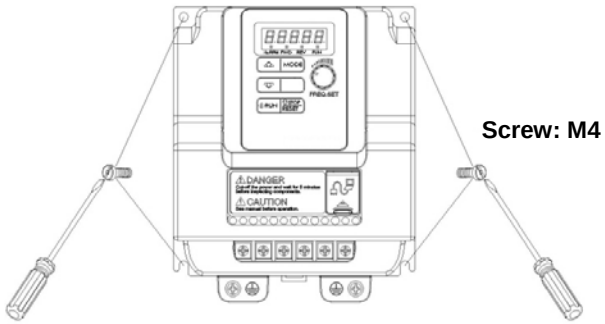

Din rail type installation:
Din rail kit includes a plastic adaptor plate as an attachment for the inverter base.
Refer to Figure below:

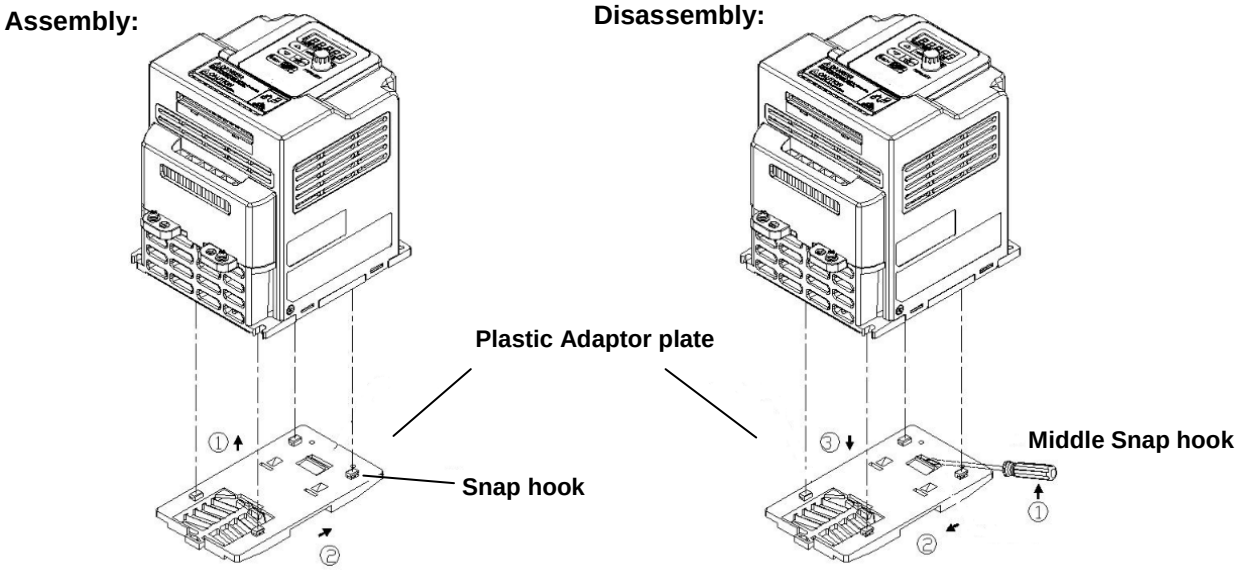

Din Rail Mounting & Dismounting as shown in the diagram below:-Use a 35mm Din Rail.

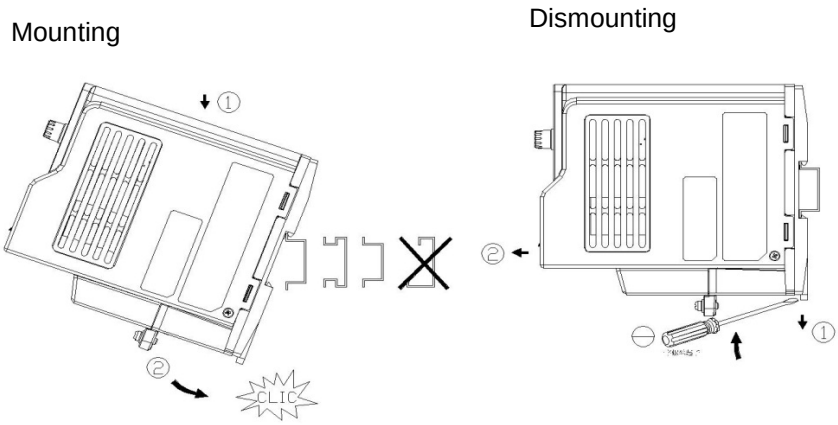

Plastic adaptor plate
JN5-DIN-L02 (Frame 2 Din rail kit part number)

3.2.2 Installation space

Provide sufficient air circulation space for cooling as shown in examples below.
Install the Inverter on surfaces that provide good heat dissipation.

Single unit Installation
Install the inverter verticality to obtain effective cooling.

Frame1 & 2

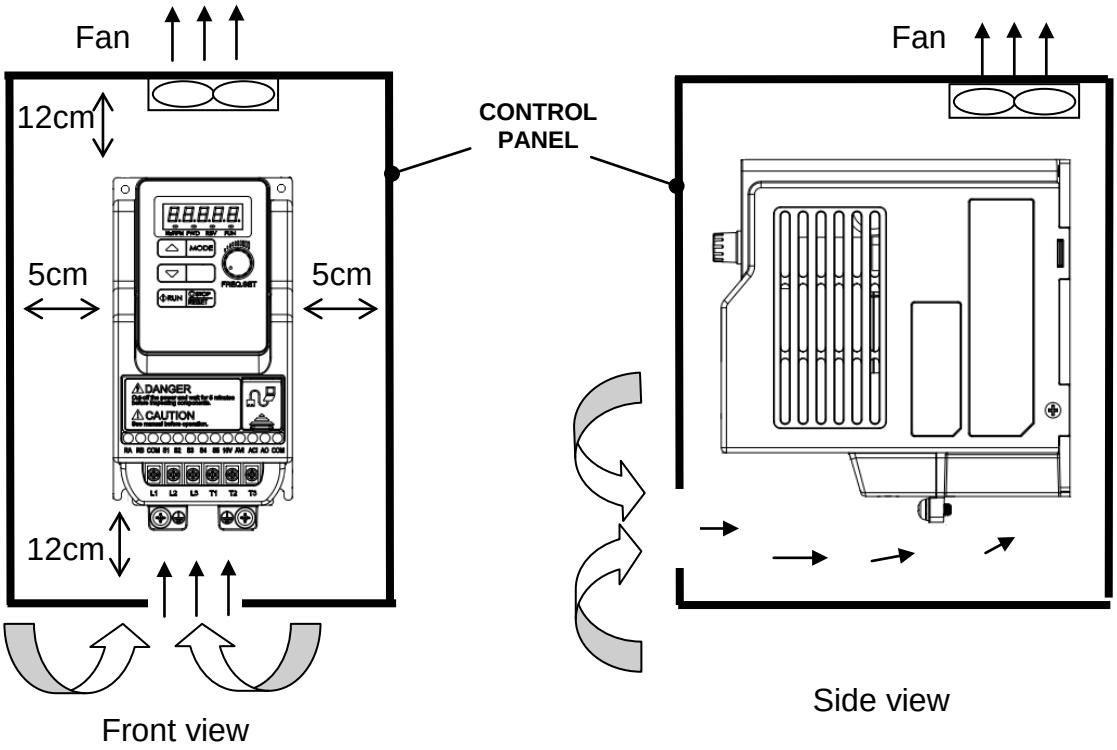

Side by side Installation

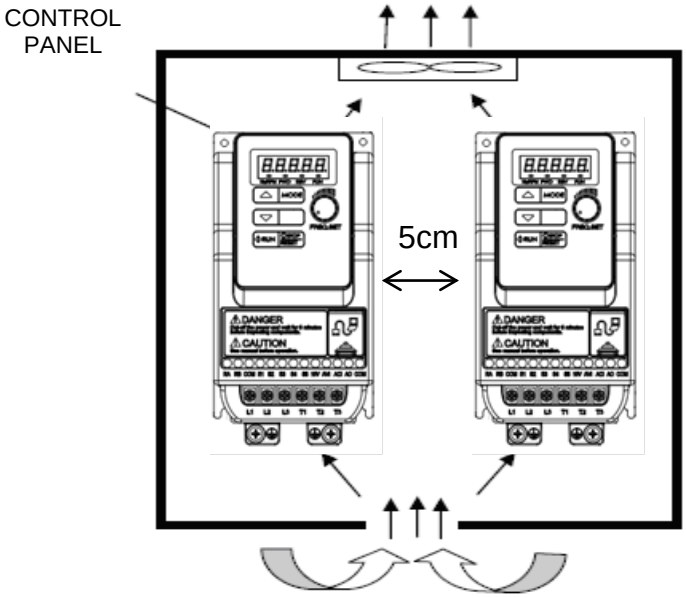

Provide the necessary physical space and cooling based on the ambient temperature and the heat loss in the panel

3.2.3 Derate curve

Curves below show the applicable output current de-rate due to setting of carrier frequency and the ambient operating temperatures of 40 and 50 degree C.

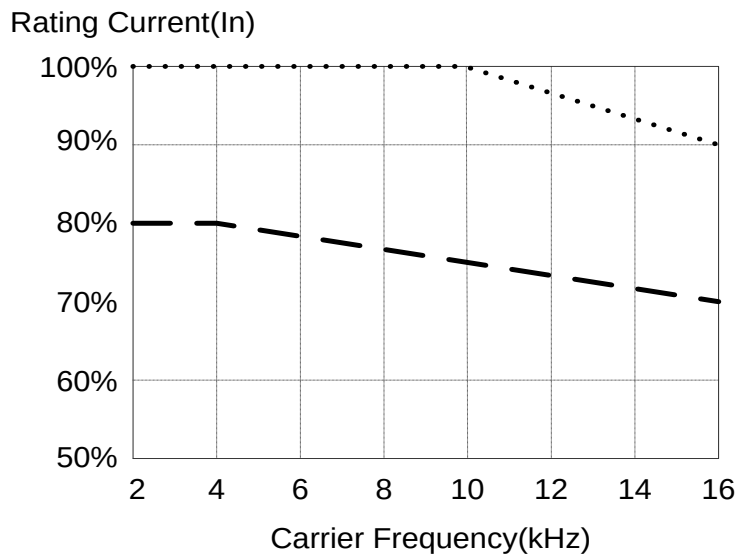

Note:

- - - - - - - - - De-rate curve of ambient temperature 40 degree C.

— — — De-rate curve of ambient temperature 50 degree C.

3.3 Wiring Guidelines

3.3.1 Power Cables

Supply power cable must be connected to TM1 terminal block, terminals L1(L) and L3(N) for single phase 200 V supply, L1(L), L2, L3(N) for three phase 200V supply and L1, L2, L3 for three phase 400 V supply.
Motor cable must be connected to TM1 terminals U, V, W.

Warning: Connection of Supply line cable to terminal**s U, V, W** will result in serious damage to the drive components.

Example power connections: Inverter with dedicated power line.

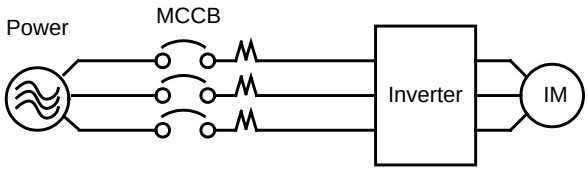

- Install a Supply RFI filter or Isolation transformer when the power source is shared with other high power electrical equipment as shown below.

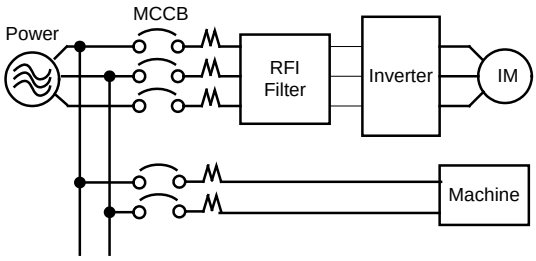

- The maximum rms symmetrical amperes and voltage are listed as follows:

Device Rating		Short circuit Rating	Maximum Voltage
Voltage	Power [kW]		
220 V	0.2 ~ 2.2	5000 A	240 V

- Electrical ratings of terminals:

Device Specification	Power [kW]	Voltage (Volt)	Current(A)
220 V	0.2 ~ 0.75	300	20
220 V	1.5 ~ 2.2		30

3.3.2 Control Cable selection and Wiring

Control cables should be connected to terminal block TM2.
Choose power & Control cables according to the following criteria:

- Use copper wires with correct diameter and temperature rating of 60/75°C.
- Minimum cable voltage rating for 200 V type inverters should be 300 VAC.
- Route all cables away from other high voltage or high current power lines to reduce interference effects.

Use a twisted pair shielded cable and connect the shield (screen) wire to the ground terminal at the inverter end only. Cable length should not exceed 50 meters.

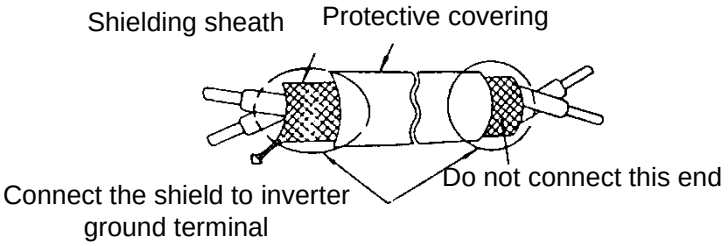

3.3.3 Wiring and EMC guidelines

For effective interference suppression, do not route power and control cables in the same conduit channel.
To prevent radiated noise, motor cable should be put in a metal conduit channel.
Alternatively an armored or shielded type motor cable should be used.
For effective suppression of noise emissions the cable armor or shield must be grounded at both ends to the motor and the inverter ground. These connections should be as short as possible.
Motor cable and signal lines of other control equipment should be at the least 30 cm apart.
S2U has a built in Class “A” EMC filter to first Environment Restricted. (Category C2).
For some installations such as residential (Category C1) an optional external Class “B” type filter will be necessary. Please consult your local supplier.

Typical Wiring:

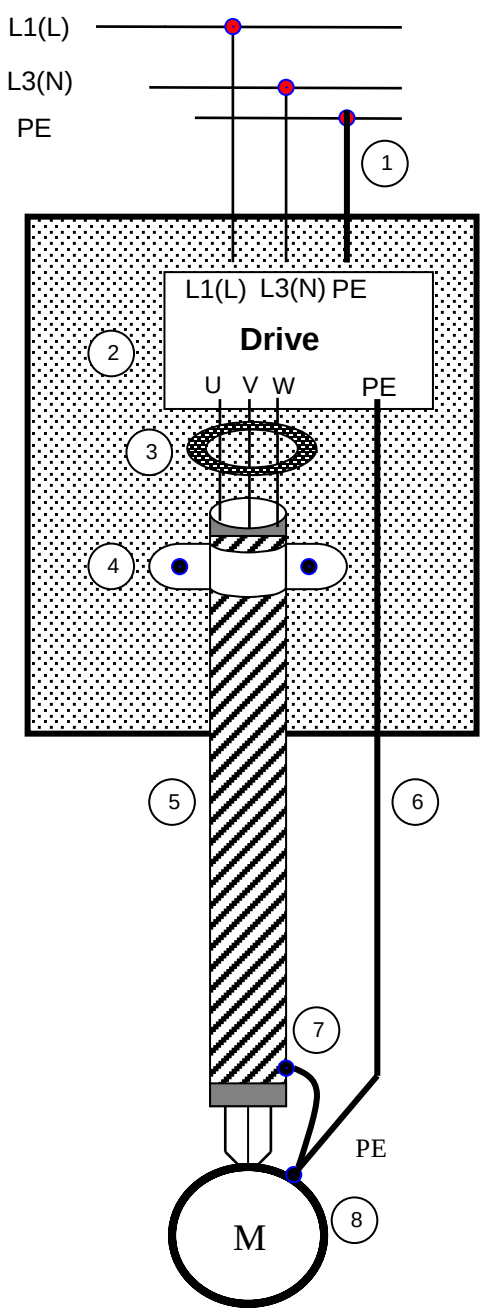

1. Protective Earth Conductor.
   Conductor size for enclosure & Back plate must comply with the local electrical standards. Min 10mm².

2. Back plate. Galvanized steel (Uncoated).

3. Ferrite core / Output reactor
   ferrite cores can be used to reduce radiated noise due to long motor cables.
   If ferrite core is used loop motor wires, 3 times round the core. Install core as close to the inverter as possible

   Output reactors provide additional benefit of reducing dU/dt for protection of motor windings.

4. Metal Cable clamp not more than 150mm from the inverter.
   Note: If no enclosure & back plate is used then connect the cable shield by a good 360 º termination to the Inverter output terminal PE.

5. Screened (Shielded four core cable).

6. Separate Protective Earth wire, routed outside motor cable separated at least 100mm.
   Note: this is the preferred method especially for large output cables and long length. Multi-core screened (3 core & protective earth) can be used for small power and short length.

7. Connect the cable shield by a good 360º termination and connect to the motor protective earth terminal.
   This link must be as short as possible.

8. Motor Earth terminal (Protective Earth).

3.3.4 Failure liability

BONFIGLIOLI VECTRON bears no responsibility:

- For any failures or damaged caused to the inverter if the recommendations in this instruction manual have not been followed specifically points listed below,

- If a correctly rated Fuse or Circuit breaker has not been installed between the power source and the inverter.

- If a magnetic contactor, a phase capacitor, burst absorber and LC or RC circuits have been connected between the inverter and the motor.

- If an incorrectly rated three-phase squirrel cage induction motor has been used

Note:

When one inverter is driving several motors, the total current of all motors running simultaneously must be less than the rated current of the inverter, and each motor has to be equipped with a correctly rated thermal overload relay.

3.3.5 Considerations for peripheral equipment

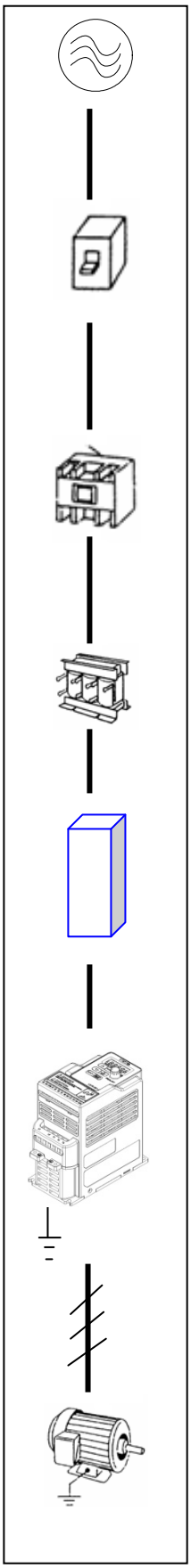

Power	Ensure that the supply voltage is correct. A molded-case circuit breaker or fused disconnect must be installed between the AC source and the inverter
Circuit Breaker & RCD	Use a molded-case circuit breaker that conforms to the rated voltage and current of the inverter. Do not use the circuit breaker as the run/stop switch for the inverter. Residual Current Circuit Breaker (RCD) Current setting should be 200 mA or above and the operating time at 0.1 second or longer to prevent malfunctions.
Magnetic contactor	Normally a magnetic contactor is not needed. A contactor can be used to perform functions such as external control and auto restart after power failure. Do not use the magnetic contactor as the run/stop switch for the inverter.
AC reactor for power quality improvement	When a 200 V / 400 V inverter with rating below 15 KW is connected to a high capacity power source (600 KVA or above) then an AC reactor can be connected for power factor improvement and reducing harmonics.
Input noise filter	S2U inverter has a built-in filter to Class “A” first Environment. (Category C2) To satisfy the required EMC regulations for your specific application you may require an additional EMC filter.
Inverter	Connect the single phase power to Terminals, L1(L) & L3(N). Warning! Connecting the output terminals U, V, and W to AC input power will damage the inverter. Output terminals U, V, and W are connected to U, V, and W terminals of the motor. To reverse the motor rotation direction just interchange any two wires at terminals U, V, and W. Ground the Inverter and motor correctly. Ground Resistance for 200 V power < 100 Ohms.
Motor	Three-phase induction motor. Voltage drop on motor due to long cable can be calculated. Volts drop should be < 10%. Phase-to-phase voltage drop [V] = $\sqrt{3}$ ×resistance of wire [Ω/km] × length of line [m] × current [A] ×10^{-3}

3.3.6 Ground connection

Inverter Ground terminal must be connected to installation ground correctly and according to the required local wiring regulations.

- Ground cable size must be according to the required local wiring regulations. Ground connection should be as short as possible.
- Do not share the ground of the inverter with other high current loads (Welding machine, high power motors). Ground each unit separately.
- Ensure that all ground terminals and connections are secure
- Do not make ground loops when several inverters share a common ground point.

Note: Please leave at least 5cm while installing inverter side by side in order to provide enough cooling space.

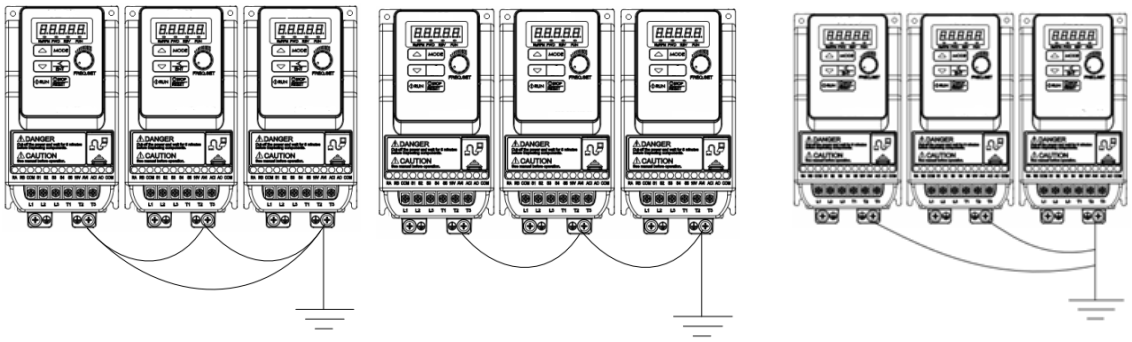

(a) Incorrect **(b) Correct** **(c) Correct**

3.3.7 Inverter exterior

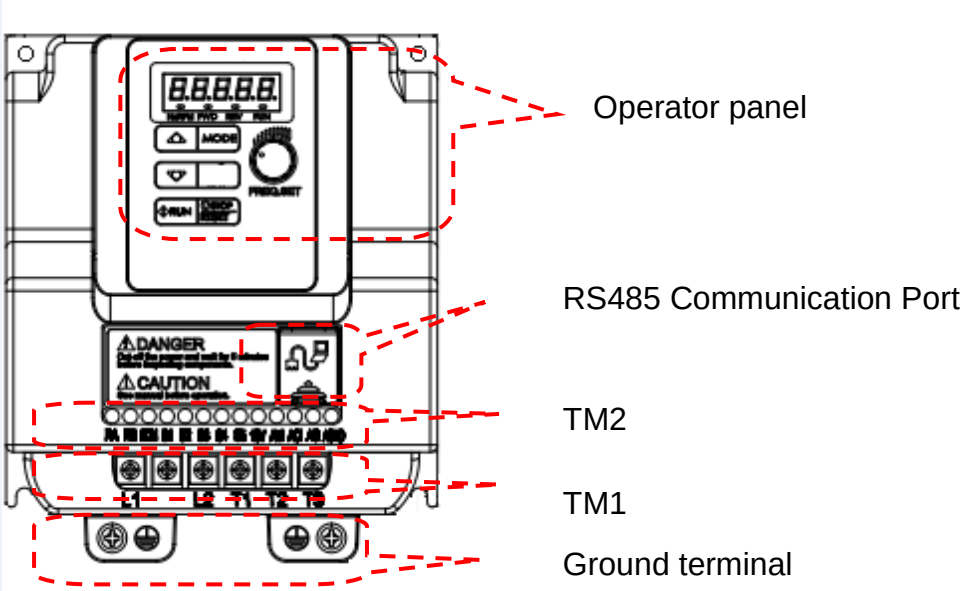

3.4 Specifications

3.4.1 Product Specifications

200 V Class: Single phase. F: Standards for built-in filter

Model : S2U230S-□□ F	02	03	07	11	13
Horse power (HP)	0.25	0.5	1	2	3
Suitable motor capacity (KW)	0.2	0.4	0.75	1.5	2.2
Rated output current (A)	1.8	2.6	4.3	7.5	10.5
Rated capacity (KVA)	0.68	1.00	1.65	2.90	4.00
Input voltage range (V)	Single Phase : 200 ~ 240 V,50/60 HZ				
Allowable voltage fluctuation	+10% - 15%				
Output voltage range (V)	Three phase 0 ~ 240 V				
Input current (A)	4.9	7.2	11	15.5	21
Allowable momentary power loss time (sec.)	1.0	1.0	1.0	2.0	2.0
Enclosure	IP20				

*The input current is calculated value at full rated output current.

3.4.2 General Specifications

Device		S2U
Control Mode		V/F Control + Auto-torque compensation function
Frequency	Range	0.01 ~ 650.00 Hz
	Setting resolution	Digital input : 0.01 Hz
		Analogue input : 0.06 Hz / 60 Hz
	Setting	Keypad : Set directly with▲▼ keys or the VR (Potentiometer) on the keypad
		External Input Terminals: AVI (0/2 ~ 10 V), ACI (0/4 ~ 20mA) input Multifunction input up/down function (Group3)
		Setting frequency by Communication method.
	Frequency limit	Lower and upper frequency limits 3 skip frequency settings.
Run	Operation set	Keypad run, stop button
		External terminals: Multi- operation-mode 2 / 3 wire selection Jog operation
		Run signal by communication method.
Main Controls	V / F curve setting	6 fixed curve and one customized curve
	Carrier frequency	1 ~ 16 kHz (default 5 kHz)
	Acceleration and deceleration control	2 Acc / Dec time parameters. 4 S curve parameters.
	Multifunction input	19 functions (refer to description on group 3)
	Multifunction output	14 functions (refer to description on group 3)
	Multifunction analogue output	5 functions (refer to description on group3)
	Main features	Overload Detection, 8 preset speeds, Auto-run, Acc/Dec Switch (2 Stages), Main/Alt run Command select, Main/Alt Frequency Command select, PID control, torque boost, V/F start Frequency, Fault reset
Display	LED	Display: parameter, parameter value, frequency, line speed, DC voltage, output voltage, output current, PID feedback, input and output terminal status, heat sink temperature, Program Version, Fault Log.
	LED Status Indicator	For run, stop, forward and reverse.
Protective Functions	Overload Protection	Integrated motor and Inverter overload protection.
	Over voltage	Above 410 VDC
	Under voltage	Below 190 VDC
	Momentary Power Loss Restart	Inverter auto-restart after a momentary power loss.
	Stall Prevention	During: Acceleration/Deceleration, Continuous Run
	Short-circuit output terminal	Electronic Circuit Protection
	Grounding Fault	Electronic Circuit Protection

Protective Functions	Additional protective functions	Heat sink over temperature protection, auto carrier frequency reduction with temperature rise, fault output, reverse output, reverse prohibit, number of auto restart attempts, parameter lock
	International certification	CE/UL
Communication		RS485 (Modbus) built in, with one to one or one to many control
Environment	Operating temperature	-10 ~ 50°C
	Storage temperature	-20 ~ 60°C
	Humidity	under 95 % RH (no condensation)
	Shock	Under 20 Hz: 1 G (9.8 m/s²), 20 ～ 50 Hz: 0.6 G (5.88 m/s²)
	EMC compliance	EN61800-3, first environment
	LVD compliance	EN50178
	Electrical safety	UL508C
	Protection level	IP20

3.5 Standard wiring

3.5.1 Single phase (PNP input)

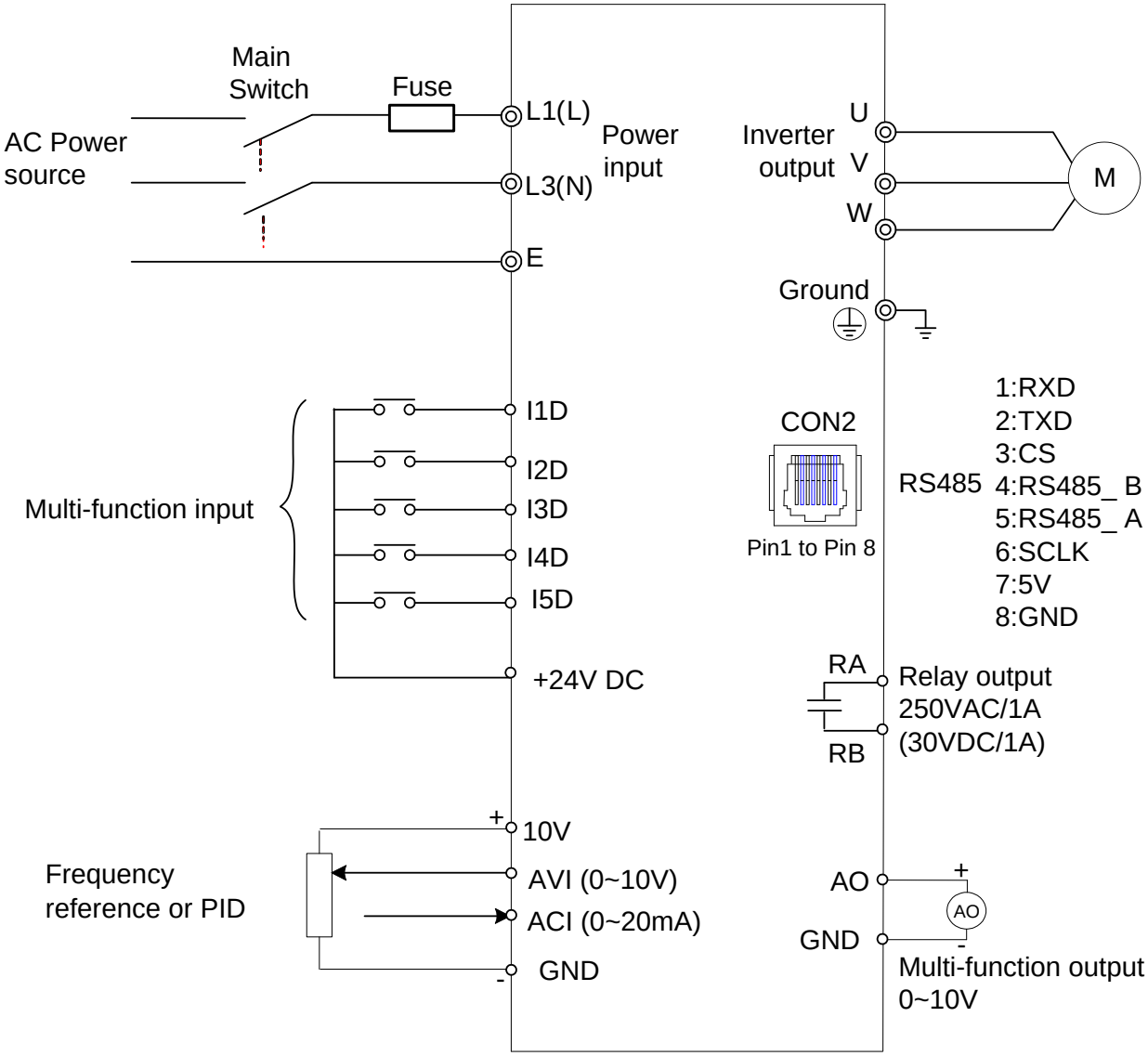

Model 200V:
S2U230S-02 F, S2U230S-03 F, S2U230S-07 F, S2U230S-11 F, S2U230S-13 F

3.6 Terminal Description

3.6.1 Description of main circuit terminals

Terminal symbols	TM1 Function Description
L1(L)	Main power input, L1(L)/L2/L3(N)
L2	
L3(N)	
U	Inverter output, connect to U, V, W terminals of motor
V	
W	
⏚	Ground terminal

Single phase

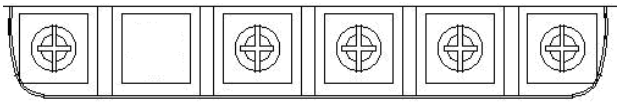

Note: the screw on L2 terminal is removed for the single phase input supply models.

3.6.2 Control circuit terminal description

Terminal symbols	TM1 Function Description
RA	Relay output terminal, Specification: 250 VAC /1 A, (30 VDC / 1 A)
RB	
+24V	24 V voltage output for I1D ~ I5D
I1D	Multi-function input terminals (refer to group3)
I2D	
I3D	
I4D	
I5D	
10V	10 V supply for external speed potentiometer
AVI	Analogue voltage input, Specification : 0 – 10 VDC / 2 – 10 VDC
ACI	Analog current input, Specification: 0/4 – 20 mA
AO	Multifunction analogue output terminal. Maximum output 10 VDC / 1 mA
GND	Ground terminal

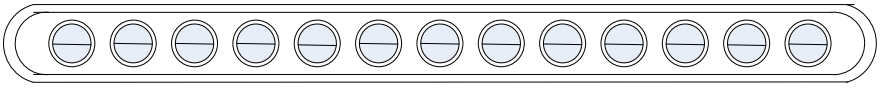

RA RB +24V I1D I2D I3D I4D I5D 10V AVI ACI AO GND

3.7 Outline Dimensions

(Unit: mm)

Frame1

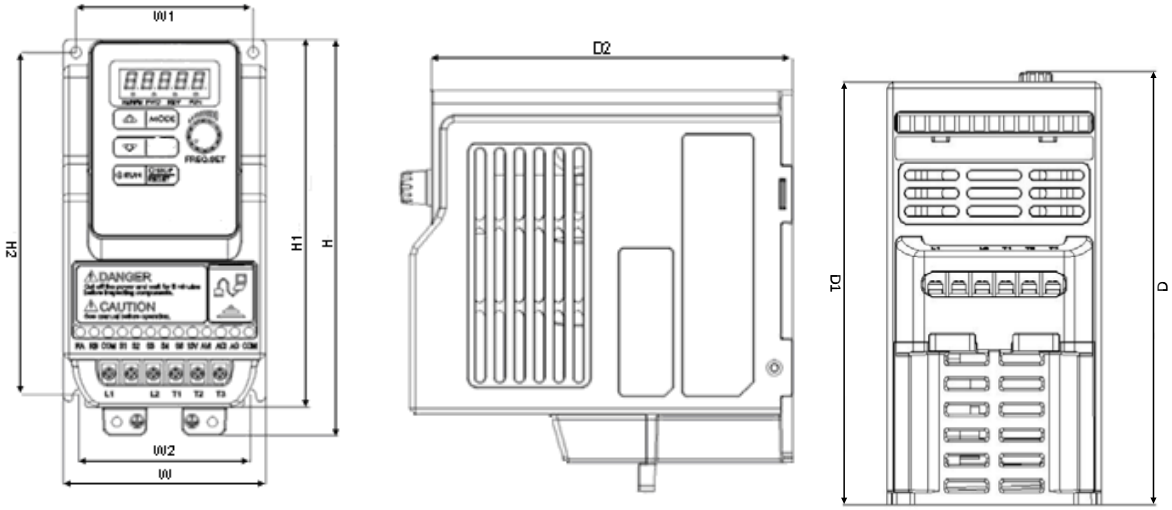

Unit : mm (inch)

Model	W	W1	W2	H	H1	H2	D	D1	Weight
S2U230S-02 F	72 (2.83)	63 (2.48)	61 (2.40)	141 (5.55)	131 (5.16)	122 (4.80)	139.2 (5.48)	136 (5.35)	0.9kg
S2U230S-03 F									
S2U230S-07 F									

F: Built-in EMC filter

Frame2

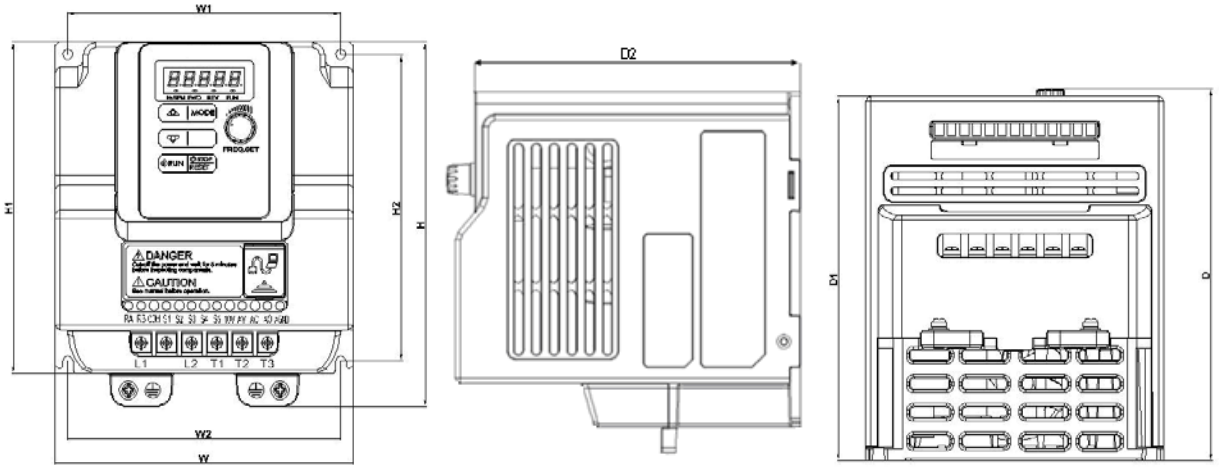

Unit : mm(inch)

Model	W	W1	W2	H	H1	H2	D	D1	Weight
S2U230S-11 F	118 (4.65)	108 (4.25)	108 (4.25)	144 (5.67)	131 (5.16)	121 (4.76)	147.3 (5.80)	144.2 (5.68)	1.6kg
S2U230S-13 F									

F: Built-in EMC filter

3.8 EMC Filter Disconnection

EMC filter may be disconnected:
Inverter drives with built-in EMC filter are not suitable for connection to certain type of supply systems, such as listed below. In these cases the EMC filter can be disabled.
In such cases check your local electrical standards requirements.

IT type supply systems (ungrounded) & certain supply systems for medical equipment.
For ungrounded supply systems: If the filter is not disconnected the supply system becomes connected to Earth through the Y capacitors on the filter circuit. This could result in danger and damage to the Drive.

Disconnection steps:

1. Remove EMC filter protection cover by screwdriver.
2. Remove EMC line by pliers.

Note: Disconnecting the EMC filter link will disable the filter function.

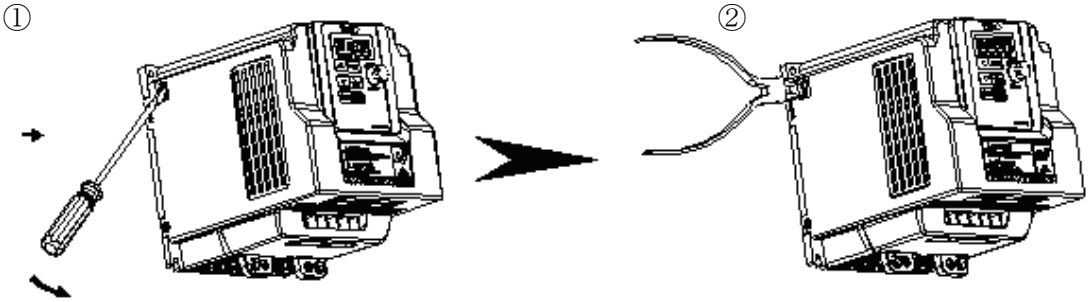

Chapter4 Software Index

4.1 Keypad Description

4.1.1 Operator Panel Functions

Type	Item	Function
Digital display & LEDs	Main digital displays	Frequency Display, Parameter, voltage, Current, Temperature, Fault messages.
	LED Status	Hz/RPM: ON when the frequency or line speed is displayed. OFF when the parameters are displayed. FWD: ON while the inverter is running forward. Flashes while stopped. REV: ON while the inverter is running reverse. Flashes while stopped. FUN: ON when the parameters are displayed. OFF when the frequency is displayed.
Variable Resistor (Potentiometer)	FREQ SET	Used to set the frequency
Keys On Keypad	RUN	RUN: Run at the set frequency.
	STOP/RESET (Dual function keys)	STOP: Decelerate or Coast to Stop. RESET: Use to Reset alarms or resettable faults.
	▲	Increment parameter number and preset values.
	▼	Decrement parameter number and preset values.
	MODE	Switch between available displays
	</ENTER (Dual function keys, a short press for left shift function, a long press for ENTER function)	“<” Left Shift: Used while changing the parameters or parameter values ENTER: Used to display the preset value of parameters and for saving the changed parameter values.

4.1.2 Digital display Description

Alpha numerical display format

Digit	LED	Letter	LED	Letter	LED	Symbol	LED
0		**A**		**n**		-	
1		**b**		**o**		°	
2		**C**		**P**		_	
3		**d**		**q**		.	
4		**E**		**r**			
5		**F**		**S**			
6		**G**		**t**			
7		**H**		**u**			
8		**J**		**V**			
9		**L**		**Y**			

Digital display indication formats

Actual output frequency	Set frequency	
Digits are lit Continually	Preset digits flashing	Selected digit flashing
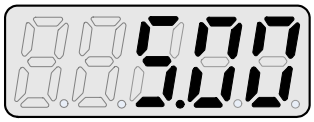	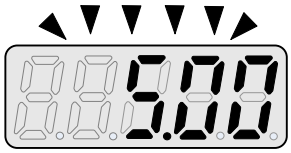	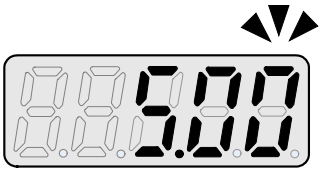

LED display examples

Display	Description
5.00	In stop mode shows the set frequency In run mode shows the actual output frequency
00-01	Selected Parameter
0	Parameter Value
220	Output Voltage
1.18	Output Current in Amps
310	DC Bus voltage
24°C	Temperature
00.0--	PID feedback value
Err1	Error display
000000	Analogue Current / Voltage ACI / AVI . Range **(0~1000)**

LED Status description

	LED Indicator light Status			
Frequency / line speed Indicator	Hz/RPM	On		
Menu mode indicator	Fun	On while not displaying frequency or line speed		
FWD indicator	FWD	On while running forward	FWD	Flashing while stopped in Forward mode.
REV indicator light	REV	On while running reverse	REV	Flashing while stopped in Reverse mode

4.1.3 Digital display set up

On power up digital display screens will be as shown below.

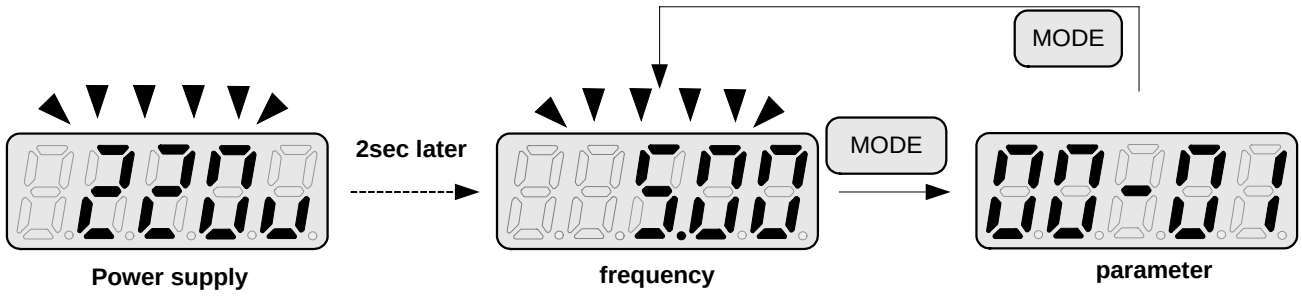

User selectable display formats:

12- 00	Display Mode
Range	**0 0 0 0 0** **high Low** **Each of the above 5 digits can be set to any of the selections below from 0 to 7** **【0】: Disable display 【1】: Output Current** **【2】: Output Voltage 【3】: DC voltage** **【4】: Temperature 【5】: PID feedback** **【6】: AVI 【7】: ACI**

The highest bit of 12-00 sets the power on the display, other bits set the selected display from range 0-7as listed above.

Example 1: Set parameter 12-00 =【10000】to obtain display format shown below.

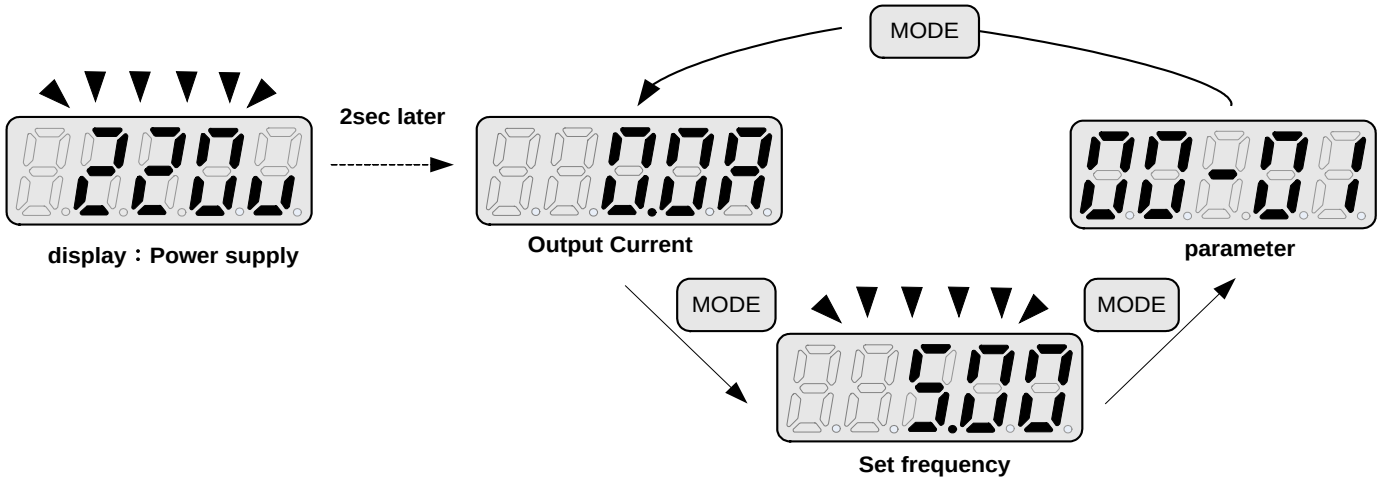

Example 2: Set parameter 12-00=【12345】to obtain the display format shown below.

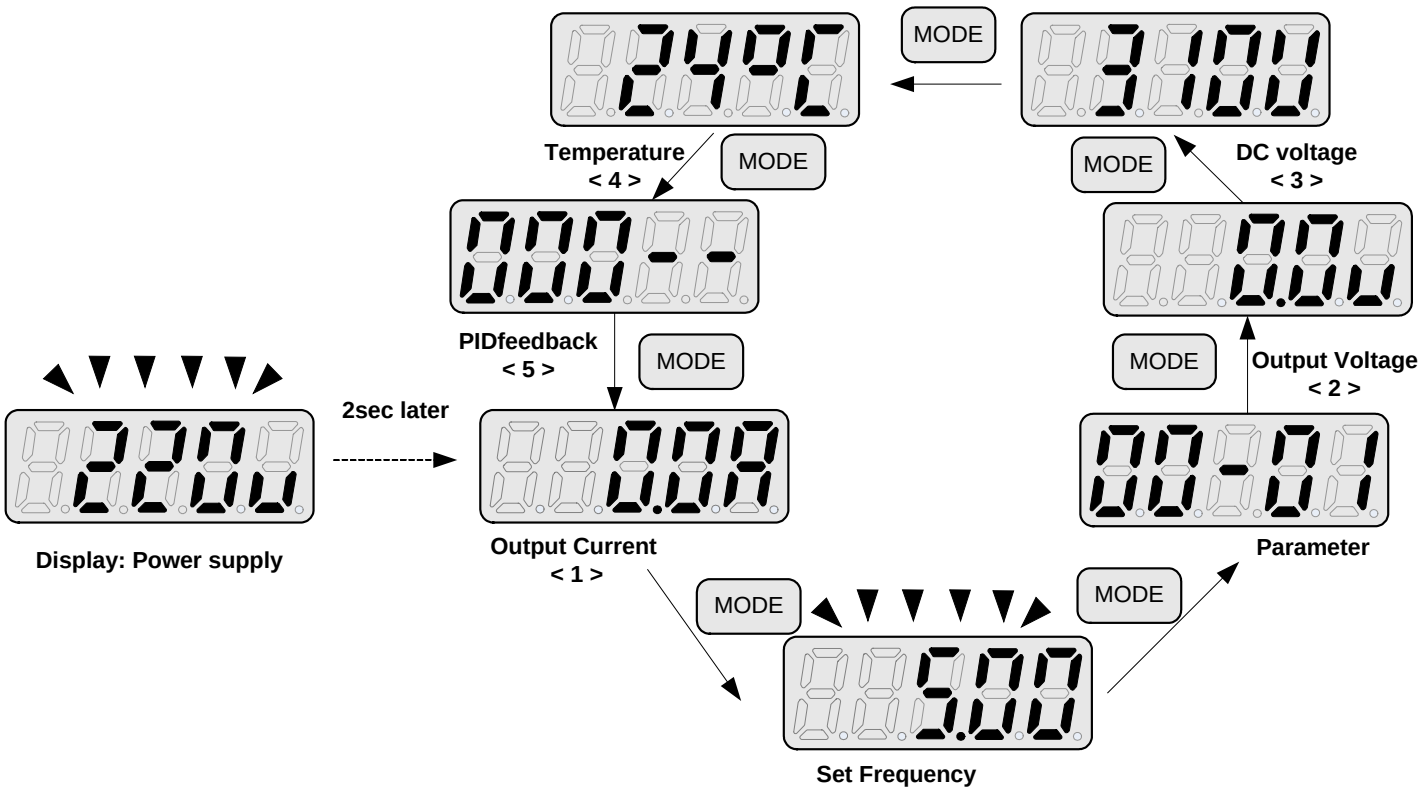

Increment/ Decrement key functions:

1.“ ▲ ”/ “ ▼ ” :

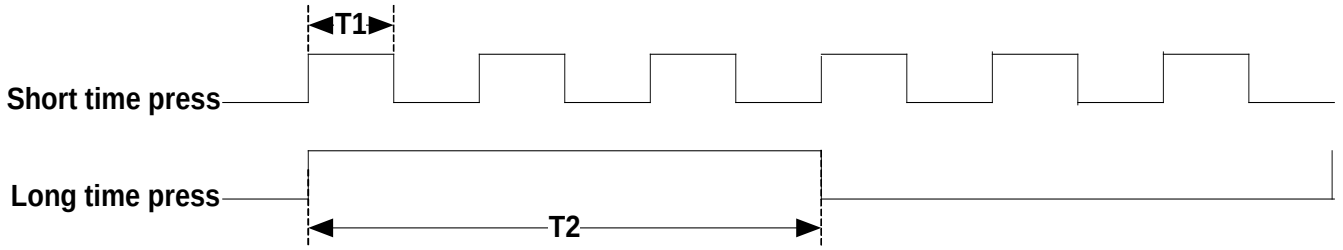

Quick pressing of these keys will Increment or Decrement the selected digit by one.
Extended pressing will Increment or Decrement the selected digit continuously.

2.“</ENT” Key functions :

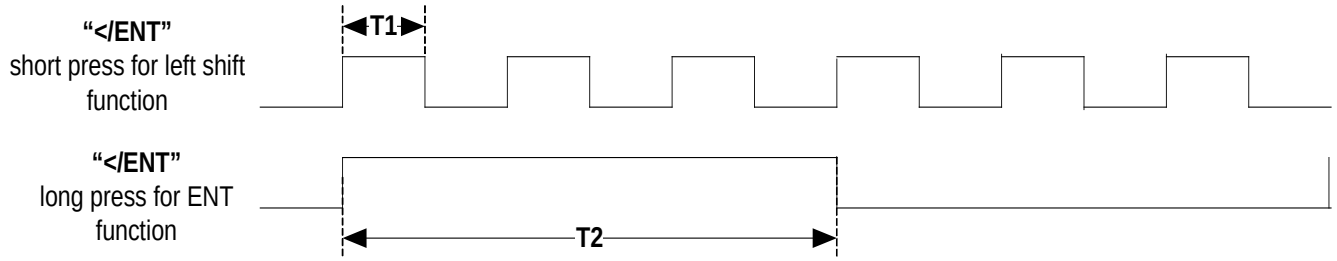

Quick pressing of this key will display the preset value of the parameter selected.
Extended pressing of this key will save the altered value of the selected parameter.

4.1.4 Example of keypad operation

Example 1: Modifying Parameters

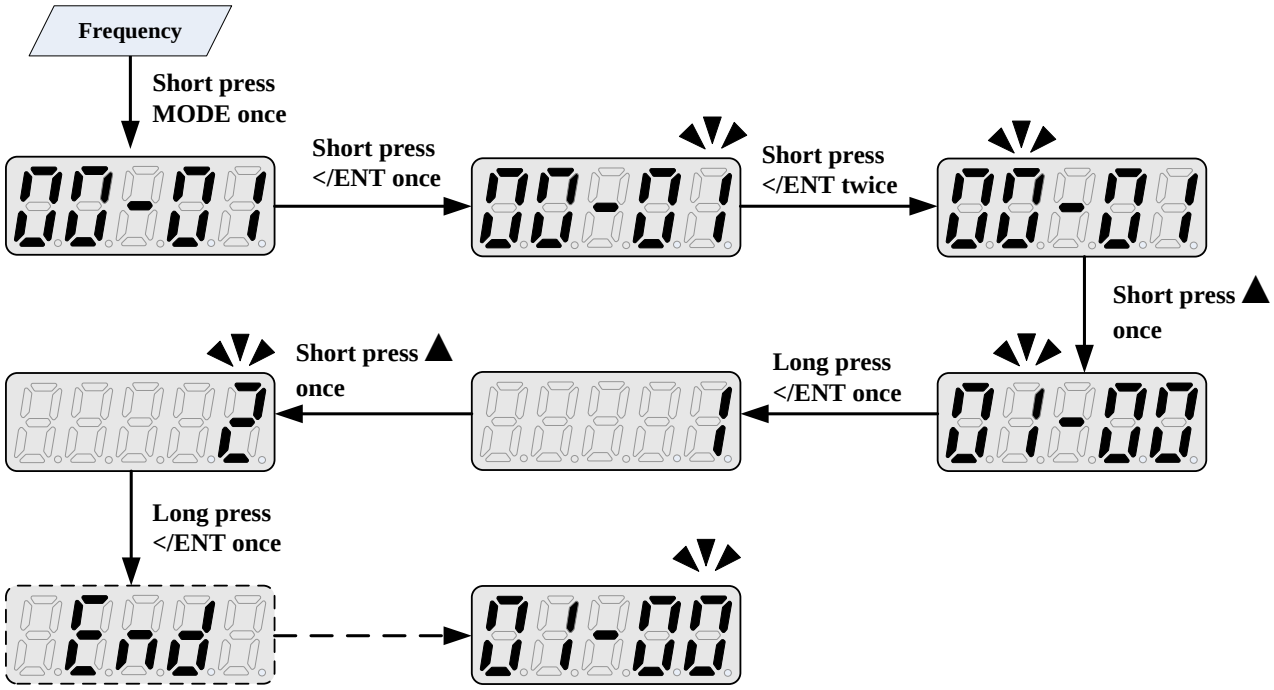

Example 2: Modifying the frequency from keypad in run and stop modes.

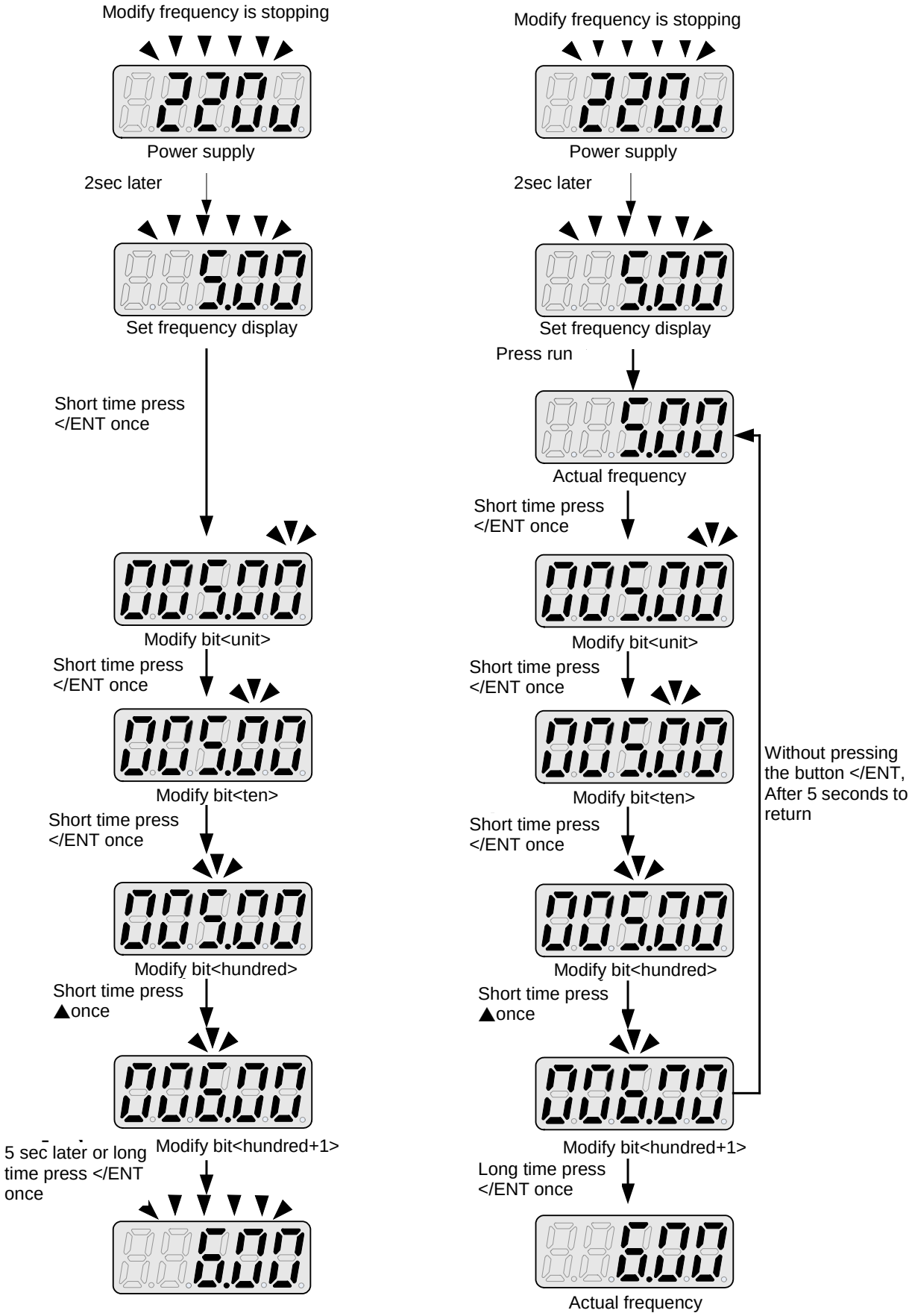

Note: frequency command setting will be limited to the range set by parameters for lower & upper frequency.

4.1.5 Operation Control

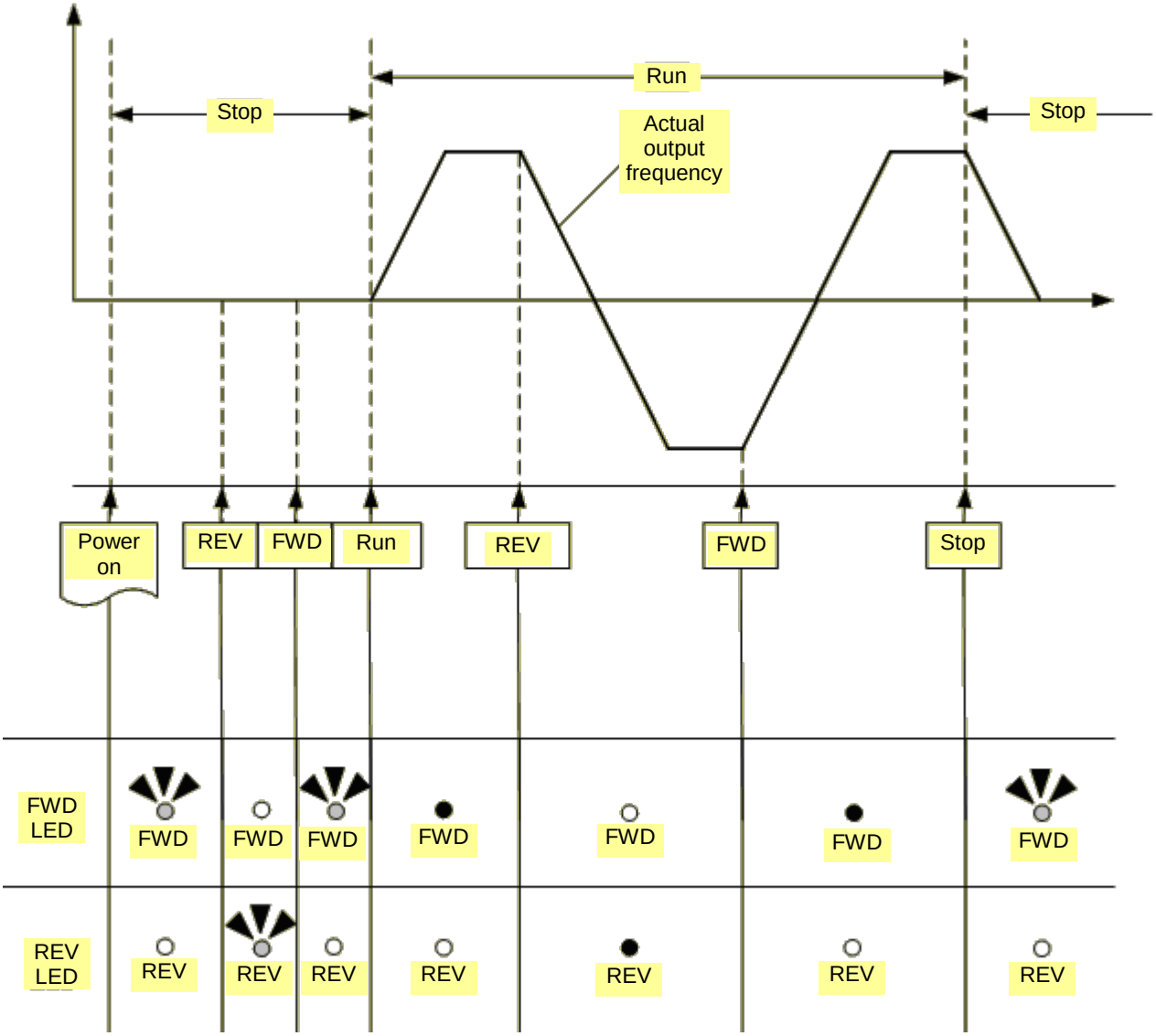

4.2 Programmable Parameter Groups

Parameter Group No.	Description
Simplified Parameter Set Group F	
Group F_	**F_0 ~ F_31**
Complete Parameter Set Group xx	
Group 00	**Basic parameters**
Group 01	**V/F Pattern selections & setup**
Group 02	**Motor parameters**
Group 03	**Multifunction digital Inputs/Outputs**
Group 04	**Analog signal inputs/ Analog output**
Group 05	**Preset Frequency Selections.**
Group 06	**Auto Run (Auto Sequencer) function**
Group 07	**Start/Stop command setup**
Group 08	**Drive and motor Protection**
Group 09	**Communication function setup**
Group 10	**PID function setup**
Group 11	**Performance control functions**
Group 12	**Digital Display & Monitor functions**
Group 13	**Inspection & Maintenance function**

Parameter notes for Parameter Groups	
***1**	Parameter can be adjusted during running mode
***2**	Cannot be modified in communication mode
***3**	Does not change with factory reset
***4**	Read only

Simplified Parameter Set

Group F_					
No.	**Description**	**Range**	**Factory Setting**	**Unit**	**Note**
F_1	Acceleration Time 1	0.1 ~ 3600.0	10.0	s	*1
F_2	Deceleration Time 1	0.1 ~ 3600.0	10.0	s	*1
F_3	Operation modes for external terminals	0: Forward/Stop-Reverse/Stop 1: Run/Stop-Reverse/Forward 2: 3-Wire Control Mode-Run/Stop	**0**	**-**	
F_4	Motor rotation	0: Forward 1: Reverse	0	-	*1
F_5	Volts/Hz Patterns	1 ~ 7	1/4	-	
F_6	Frequency Upper Limit	0.01 ~ 650.00	50.00/60.00	Hz	
F_7	Frequency Lower Limit	0.00 ~ 649.99	0.00	Hz	
F_8	Preset Speed 0 (Keypad Freq)	0.00 ~ 650.00	5.00	Hz	
F_9	Jog Frequency	1.00 ~ 25.00	2.00	Hz	*1
F_10	Main Run Source Selection	0: Keypad 1 :External Run/Stop Control 2: Communication	0	-	
F_11	Main Frequency Source Selection	0: Keypad 1: Potentiometer on Keypad 2: External AVI Analog Signal Input 3 :External ACI Analog Signal Input 4: External Up/Down Frequency Control 5: Communication setting Frequency 6 :PID output frequency	0 0	- -	
F_12	Carrier Frequency (kHz)	1 ~ 16	5	KHz	
F_13	Volts/Hz Curve Modification (Torque Boost)	0 ~ 10.0	0.0	%	*1
F_14	Stopping Method	0: Deceleration to stop 1: Coast to stop	0		
F_15	DC Injection Brake Time (Seconds) In stop mode	0.0 ~ 25.5	0.5	s	
F_16	DC Injection Brake Start Frequency (Hz) In Stop mode	0.10 ~ 10.00	1.5	Hz	
F_17	DC Injection Brake Level (%) In stop mode	0 ~ 20	5	%	
F_18	Motor Rated Current (OL1)	----		A	
F_19	Multifunction Input Term. I1D	0 :Forward/Stop Command or Run /Stop	0	-	
F_20	Multifunction Input Term. I2D	1 :Reverse/Stop Command Or REV/FWD	1	-	

Group F_					
No.	**Description**	**Range**	**Factory Setting**	**Unit**	**Note**
F_21	Output Relay (RY1)	0: Run 1: Fault 2: Setting Frequency Reached 3 :Frequency Reached (3-13 ± 3-14) 4: Output Frequency Detection1 (> 3-13) 5: Output Frequency Detection2 (< 3-13) 6: Auto-Restart 7: Momentary AC Power Loss 8: Rapid Stop 9: Base Block 10: Motor Overload Protection (OL1) 11: Drive Overload Protection (OL2) 12: Reserved 13: Output Current Reached 14: Brake Control	0	-	
F_22	Reverse operation control	0: Reverse command is enabled 1: Reverse command is disabled	0	-	
F_23	Momentary Power Loss and Restart	0: Momentary Power Loss and Restart disable 1: Momentary power loss and restart enable	0	s	
F_24	Number of Auto Restart Attempts	0 ~ 10	0	-	
F_25	Reset Drive to Factory Settings	1150: Reset to factory setting. 50Hz system. 1160: Reset to factory setting. 60Hz system.	00000	-	
F_26	Auto _ Run Mode frequency command 1	0.00 ~ 650.00	0.00	Hz	*1
F_27	Auto _ Run Mode frequency command 2		0.00	Hz	*1
F_28	Direct Running After Power Up	0: Enable Direct run on power up 1: Disable Direct run on power up	1	-	
F_29	Software Version	----	-	-	*3*4
F_30	Fault Log (Last 3 Faults)	----	-	-	*3*4
F_31	Parameter Set Select	0: Simplified Parameter Set 1: Complete Parameter Set	0	-	
13-09	*Parameter Set Select*	*0: Complete Parameter Set* *1: Simplified Parameter Set*	*1*	-	

Complete Parameter Set

Group 00 – The basic parameter group					
No.	**Description**	**Range**	**Factory Setting**	**Unit**	**Note**
00-00	Reserved				
00-01	Motor rotation	0: Forward 1 :Reverse	0	-	*1
00-02	Main Run Source Selection	0: Keypad 1: External Run/Stop Control 2: Communication	0	-	
00-03	Alternative Run Source Selection	0: Keypad 1: External Run/Stop Control 2: Communication	0	-	
00-04	Operation modes for external terminals	0: Forward/Stop, Reverse/Stop 1: Run/Stop, Reverse/Forward 2: 3-Wire Control Mode, Run/Stop	0	-	
00-05	Main Frequency Source Selection	0: Keypad 1: Potentiometer on Keypad 2: External AVI Analog Signal Input 3 :External ACI Analog Signal Input 4: External Up/Down Frequency Control 5: Communication Setting Frequency 6: PID output frequency	0	-	
00-06	Alternative Frequency Source Selection	0: Keypad 1 :Potentiometer on Keypad 2 :External AVI Analog Signal Input 3: External ACI Analog Signal Input 4: External Up/Down Frequency Control 5: Communication setting Frequency 6: PID output frequency.	4	-	
00-07	Main and Alternative Frequency Command modes	0: Main Or Alternative Frequency 1: Main frequency + Alternative Frequency	0	-	
00-08	Communication Frequency Command	0.0 ~ 650.00		Hz	*4
00-09	Frequency command Save mode (Communication mode)	0: Save the frequency before power down 1: Save the communication frequency	0	-	
00-10	Initial Frequency Selection (keypad mode)	0 :by Current Frequency Command 1: by 0 Frequency Command 2: by 00-11	0	-	
00-11	Initial Frequency Keypad mode	0.00 ~ 650.00	50.00/60.00	Hz	
00-12	Frequency Upper Limit	0.01 ~ 650.00	50.00/60.00	Hz	
00-13	Frequency Lower Limit	0.00 ~ 649.99	0.00	Hz	
00-14	Acceleration Time 1	0.1 ~ 3600.0	10.0	s	*1
00-15	Deceleration Time 1	0.1 ~ 3600.0	10.0	s	*1
00-16	Acceleration Time 2	0.1 ~ 3600.0	10.0	s	*1
00-17	Deceleration Time 2	0.1 ~ 3600.0	10.0	s	*1
00-18	Jog Frequency	1.00 ~ 25.00	2.00	Hz	*1
00-19	Jog Acceleration Time	0.1 ~ 25.5	0.5	s	*1
00-20	Jog Deceleration Time	0.1 ~ 25.5	0.5	s	*1

Group 01 – V/F Pattern selection & Setup					
No.	**Description**	**Range**	**Factory Setting**	**Unit**	**Note**
01-00	Volts/Hz Patterns	1 ~ 7	1/4	-	
01-01	V/F Max voltage	198.0 ～ 256.0	220.00	V AC	
01-02	Max Frequency	0.20 ~ 650.00	50.00/60.00	Hz	
01-03	Max Frequency Voltage Ratio	0.0 ~ 100.0	100.0	%	
01-04	Mid Frequency 2	0.10 ~ 650.00	25.00/30.00	Hz	
01-05	Mid Frequency Voltage Ratio 2	0.0 ~ 100.0	50.0	%	
01-06	Mid Frequency 1	0.10 ~ 650.00	10.00/12.00	Hz	
01-07	Mid Frequency Voltage Ratio 1	0.0 ~ 100.0	20.0	%	
01-08	Min Frequency	0.10 ~ 650.00	0.50/0.60	Hz	
01-09	Min Frequency Voltage Ratio	0.0 ~ 100.0	1.0	%	
01-10	Volts/Hz Curve Modification (Torque Boost)	0 ~ 10.0	0.0	%	*1
01-11	V/F start Frequency	0.00 ~ 10.00	0.00	Hz	

Group 02- Motor parameters					
No.	**Description**	**Range**	**Factory Setting**	**Unit**	**Note**
02-00	Motor No Load Current	----		A	*3
02-01	Motor Rated Current (OL1)	----		A	
02-02	Motor rated Slip Compensation	0.0 ~ 100.0	0.0	%	*1
02-03	Motor Rated Speed	----		Rpm	
02-04	Motor Rated Voltage	----		VAC	*4

Group 03 – Multi function Digital Inputs/Outputs					
No.	**Description**	**Range**	**Factory Setting**	**Unit**	**Note**
03-00	Multifunction Input Term. I1D	0: Forward/Stop Command or Run / Stop	0	-	
03-01	Multifunction Input Term. I2D	1: Reverse/Stop Command Or REV / FWD	1	-	
03-02	Multifunction Input Term. I3D	2: Preset Speed 1 (5-02)	8	-	
03-03	Multifunction Input Term. I4D	3: Preset Speed 2 (5-03)	9	-	
03-04	Multifunction Input Term. I5D	4: Preset Speed 4 (5-05)	17	-	
		6: Jog Forward Command			
		7: Jog Reverse Command			
		8: Up Command			
		9: Down Command			
		10: Acc / Dec 2			
		11: Acc / Dec Disabled			
		12: Main/Alternative Run Command select			
		13: Main/Alternative Frequency Command select			
		14: Rapid Stop (Deceleration to stop)			
		15: Base Block			
		16: Disable PID Function			
		17: Reset			
		18: Auto Run Mode enable			
03-05	Reserved				
03-06	Up/Down frequency band	0.00 ~ 5.00	0.00	Hz	
03-07	Up/Down Frequency modes	0: When Up/Down is used, the preset frequency is held as the inverter stops, and the UP/Down function is disabled.	0	-	
		1: When Up/Down is used, the preset frequency is reset to 0 Hz as the inverter stops.			
		2: When Up/Down is used, the preset frequency is held as the inverter stops, and the UP/Down is available.			
03-08	I1D ~ I5D scan confirmation	1 ~ 400 (Number of Scan cycles)	20	1ms	
03-09	I1D ~ I5D switch type select	xxxx0: I1D NO xxxx1: I1D NC	00000	-	
		xxx0x: I2D NO xxx1x: I2D NC			
		xx0xx: I3D NO xx1xx: I3D NC			
		x0xxx: I4D NO x1xxx: I4D NC			
		0xxxx: I5D NO 1xxxx: I5D NC			
03-10	Reserved				
03-11	Output Relay (RY1)	0: Run	0	-	
		1: Fault			
		2: Setting Frequency Reached			
		3: Frequency Reached (3-13 ± 3-14)			
		4: Output Frequency Detection1 (> 3-13)			
		5: Output Frequency Detection2 (< 3-13)			
		6: Auto-Restart			
		7: Momentary AC Power Loss			
		8: Rapid Stop			
		9: Base Block			
		10: Motor Overload Protection(OL1)			
		11: Drive Overload Protection(OL2)			
		12: Reserved			
		13: Output Current Reached			
		14: Brake Control			
03-12	Reserved				

03-13	Output frequency detection level (Hz)	0.00 ~ 650.00	0.00	Hz	*1
03-14	Frequency Detection band	0.00 ~ 30.00	2.00	Hz	*1
03-15	Output Current Detection Level	0.1 ~ 15.0	0.1	A	
03-16	Output. Current Detection Period	0.1 ~ 10.0	0.1	s	
03-17	External Brake Release level	0.00 ~ 20.00	0.00	Hz	
03-18	External Brake Engage Level	0.00 ~ 20.00	0.00	Hz	
03-19	Relay Output function type	0 :A (Normally open) 1: B (Normally close)	0	-	

※ “NO” indicates normally open, “NC” indicates normally closed.

Group 04 – Analog signal inputs/ Analogue output functions					
No.	**Description**	**Range**	**Factory Setting**	**Unit**	**Note**
04-00	AVI/ACI analog Input signal type select	AVI / ACI 0: 0 ~ 10V / 0 ~ 20mA 1: 0 ~ 10V / 4 ~ 20mA 2: 2 ~ 10V / 0 ~ 20mA 3: 2 ~ 10V / 4 ~ 20mA	0	-	
04-01	AVI Signal Verification Scan rate	1 ~ 400	100	1ms	
04-02	AVI Gain	0 ~ 1000	100	%	*1
04-03	AVI Bias	0 ~ 100	0	%	*1
04-04	AVI Bias Selection	0: Positive 1: Negative	0	-	*1
04-05	AVI Slope	0: Positive 1: Negative	0	-	*1
04-06	ACI Signal Verification Scan rate	1 ~ 400	100	1ms	
04-07	ACI Gain	0 ~ 1000	100	%	*1
04-08	ACI Bias	0 ~ 100	0	%	*1
04-09	ACI Bias Selection	0: Positive 1: Negative	0	-	*1
04-10	ACI Slope	0: Positive 1: Negative	0	-	*1
04-11	Analog Output mode (AO)	0: Output Frequency 1: Frequency Command 2: Output Voltage 3: DC Bus Voltage 4: Motor Current	0	-	*1
04-12	Analog Output AO Gain (%)	0 ~ 1000	100	%	*1
04-13	Analog Output AO Bias (%)	0 ~ 1000	0	%	*1
04-14	AO Bias Selection	0: Positive 1: Negative	0	-	*1
04-15	AO Slope	0: Positive 1: Negative	0	-	*1

Group 05 – Preset Frequency Selections.					
No.	**Description**	**Range**	**Factory Setting**	**Unit**	**Note**
05-00	Preset Speed Control mode Selection	0: Common Accel./Decel. 1: Individual Accel./Decel. for each preset speed 0-7	0	-	
05-01	Preset Speed 0 (Keypad Freq)	0.00 ~ 650.00	5.00	Hz	
05-02	Preset Speed1 (Hz)		5.00	Hz	*1
05-03	Preset Speed2 (Hz)		10.00	Hz	*1
05-04	Preset Speed3 (Hz)		20.00	Hz	*1
05-05	Preset Speed4 (Hz)		30.00	Hz	*1
05-06	Preset Speed5 (Hz)		40.00	Hz	*1
05-07	Preset Speed6 (Hz)		50.00	Hz	*1
05-08	Preset Speed7 (Hz)		50.00	Hz	*1
05-09 ~ 05-16	Reserved				
05-17	Preset Speed0-Acctime	0.1 ~ 3600.0	10.0	s	*1
05-18	Preset Speed0-Dectime		10.0	s	*1
05-19	Preset Speed1-Acctime		10.0	s	*1
05-20	Preset Speed1-Dectime		10.0	s	*1
05-21	Preset Speed2-Acctime		10.0	s	*1
05-22	Preset Speed2-Dectime		10.0	s	*1
05-23	Preset Speed3-Acctime		10.0	s	*1
05-24	Preset Speed3-Dectime		10.0	s	*1
05-25	Preset Speed4-Acctime		10.0	s	*1
05-26	Preset Speed4-Dectime		10.0	s	*1
05-27	Preset Speed5-Acctime		10.0	s	*1
05-28	Preset Speed5-Dectime		10.0	s	*1
05-29	Preset Speed6-Acctime		10.0	s	*1
05-30	Preset Speed6-Dectime		10.0	s	*1
05-31	Preset Speed7-Acctime		10.0	s	*1
05-32	Preset Speed7-Dectime		10.0	s	*1

Group 06 – Auto Run (Auto Sequencer) function					
No.	**Description**	**Range**	**Factory Setting**	**Unit**	**Note**
06-00	Auto Run (sequencer) mode selection	0: Disabled. 1: Single cycle. (Continues to run from the Unfinished step if restarted). 2: Periodic cycle. (Continues to run from the unfinished step if restarted). 3: Single cycle, then holds the speed of final step to run. (Continues to run from the unfinished step if restarted). 4: Single cycle. (Starts a new cycle if restarted). 5: Periodic cycle. (Starts a new cycle if restarted). 6: Single cycle, then hold the speed of final step to run (Starts a new cycle if restarted).	0	-	
06-01	Auto _ Run Mode frequency command 1	0.00~650.00	0.00	Hz	*1
06-02	Auto _ Run Mode frequency command 2		0.00	Hz	*1
06-03	Auto _ Run Mode frequency command 3		0.00	Hz	*1
06-04	Auto _ Run Mode frequency command 4		0.00	Hz	*1
06-05	Auto _ Run Mode frequency command 5		0.00	Hz	*1
06-06	Auto _ Run Mode frequency command 6		0.00	Hz	*1
06-07	Auto _ Run Mode frequency command 7		0.00	Hz	*1
06-08 ~ 06-15	Reserved				
06-16	Auto_ Run Mode running time setting 0	0.0 ~ 3600.0	0.0	s	
06-17	Auto_ Run Mode running time setting 1		0.0	s	
06-18	Auto_ Run Mode running time setting 2		0.0	s	
06-19	Auto_ Run Mode running time setting 3		0.0	s	
06-20	Auto_ Run Mode running time setting 4		0.0	s	
06-21	Auto_ Run Mode running time setting 5		0.0	s	
06-22	Auto_ Run Mode running time setting 6		0.0	s	
06-23	Auto_ Run Mode running time setting 7		0.0	s	
06-24 ~ 06-31	Reserved				
06-32	Auto_ Run Mode running direction 0	0: Stop 1: Forward 2: Reverse	0	-	
06-33	Auto_ Run Mode running direction 1		0	-	

06-34	Auto_ Run Mode running direction 2		0	-	
06-35	Auto_ Run Mode running direction 3		0	-	
06-36	Auto_ Run Mode running direction 4		0	-	
06-37	Auto_ Run Mode running direction 5		0	-	
06-38	Auto_ Run Mode running direction 6		0	-	
06-39	Auto_ Run Mode running direction 7		0	-	

Group 07 – Start/Stop command setup					
No.	**Description**	**Range**	**Factory Setting**	**Unit**	**Note**
07-00	Momentary Power Loss and Restart	0: Momentary Power Loss and Restart disable 1: Momentary power loss and restart enable	0	s	
07-01	Auto Restart Delay Time	0.0 ~ 800.0	0.0	s	
07-02	Number of Auto Restart Attempts	0 ~ 10	0	-	
07-03	Reset Mode Setting	0: Enable Reset Only when Run Command is Off 1: Enable Reset when Run Command is On or Off	0	-	
07-04	Direct Running After Power Up	0: Enable Direct run on power up 1: Disable Direct run on power up	1	-	
07-05	Delay-ON Timer	1.0 ~ 300.0	1.0	s	
07-06	DC Injection Brake Start Frequency (Hz) In Stop mode	0.10 ~ 10.00	1.5	Hz	
07-07	DC Injection Brake Level (%) In stop mode	0 ~ 20	5	%	
07-08	DC Injection Brake Time (Seconds) In stop mode	0.0 ~ 25.5	0.5	s	
07-09	Stopping Method	0: Deceleration to stop 1: Coast to stop	0		

Group 08 – Drive & Motor Protection functions					
No.	**Description**	**Range**	**Factory Setting**	**Unit**	**Note**
08-00	Trip Prevention Selection	xxxx0: Enable Trip Prevention During Acceleration xxxx1: Disable Trip Prevention During Acceleration xxx0x: Enable Trip Prevention During Deceleration xxx1x: Disable Trip Prevention During Deceleration xx0xx: Enable Trip Prevention in Run Mode xx1xx: Disable Trip Prevention in Run Mode x0xxx: Enable over voltage Prevention in Run Mode x1xxx: Disable over voltage Prevention in Run Mode	00000	-	
08-01	Trip Prevention Level During Acceleration (%)	50 ~ 200	200	Inverter Rated Current [100%]	
08-02	Trip Prevention Level During Deceleration (%)	50 ~ 200	200		
08-03	Trip Prevention Level In Run Mode (%)	50 ~ 200	200		
08-04	over voltage Prevention Level in Run Mode	350 ~ 390	380	VDC	
08-05	Electronic Motor Overload Protection Operation Mode	0: Disable Electronic Motor Overload Protection 1: Enable Electronic Motor Overload Protection	1	-	
08-06	Operation After Overload Protection is Activated	0: Coast-to-Stop After Overload Protection is Activated 1: Drive Will Not Trip when Overload Protection is Activated (OL1)	0	-	
08-07	Over heat Protection (cooling fan control)	0: Auto (Depends on temp.) 1: Operate while in RUN mode 2: Always Run 3: Disabled	1	-	
08-08	AVR Function (Auto Voltage Regulation)	0: AVR function enable 1: AVR function Disable 2: AVR function disable for stop 3: AVR function disable for deceleration 4: AVR function disable for stop and deceleration. 5: When VDC > (360 V / 740 V), AVR function disable for stop and deceleration.	4	-	
08-09	Input phase lost protection	0: Disabled 1: Enabled	0	-	

Group 09 – Communication function setup					
No.	**Description**	**Range**	**Factory Setting**	**Unit**	**Note**
09-00	Assigned Communication Station Number	1 ~ 32	1	-	*2*3
09-01	RTU code /ASCII code select	0: RTU code 1: ASCII code	0	-	*2*3
09-02	Baud Rate Setting (bps)	0: 4800 1: 9600 2: 19200 3: 38400	2	bps	*2*3
09-03	Stop Bit Selection	0: 1 Stop Bit 1: 2 Stop Bits	0	-	*2*3
09-04	Parity Selection	0: Without Parity 1: With Even Parity 2: With Odd Parity	0	-	*2*3
09-05	Data Format Selection	0: 8-Bits Data 1: 7-Bits Data	0	-	*2*3
09-06	Communication time-out detection time	0.0 ~ 25.5	0.0	s	
09-07	Communication time-out operation selection	0: Deceleration to stop (00-15: Deceleration time 1) 1: Coast to stop 2: Deceleration to stop (00-17: Deceleration time 2) 3: continue operating	0	-	
09-08	Error 6 verification time.	1 ~ 20	3		
09-09	Drive Transmit delay Time（ms）	5 ~ 65	5	ms	

Group10 – PID function Setup					
No.	**Description**	**Range**	**Factory Setting**	**Unit**	**Note**
10-00	PID target value selection (when 00-05/00-06 = 6, this function is enabled)	0: Potentiometer on Keypad 1: Analog Signal Input. (AVI) 2: Analog Signal Input. (ACI) 3: Frequency set by communication 4: Keypad Frequency parameter 10-02	1	-	*1
10-01	PID feedback value selection	0: Potentiometer on Keypad 1: Analog Signal Input. (AVI) 2: Analog Signal Input. (ACI) 3: Frequency set by communication	2	-	*1
10-02	PID Target (keypad input)	0.0 ~ 100.0	50.0	%	*1
10-03	PID Mode Selection	0: Disabled 1: Deviation D Control. FWD Characteristic. 2: Feedback D Control FWD Characteristic. 3: Deviation D Control Reverse Characteristic. 4: Feedback D Control Reverse Characteristic.	0	-	
10-04	Feedback Gain Coefficient	0.00 ~ 10.00	1.00	%	*1
10-05	Proportional Gain	0.0 ~ 10.0	1.0	%	*1
10-06	Integral Time	0.0 ~ 100.0	10.0	s	*1
10-07	Derivative Time	0.00 ~ 10.00	0.00	s	*1
10-08	PID Offset	0: Positive 1: Negative	0	-	*1
10-09	PID Offset Adjust	0 ~ 109	0	%	*1
10-10	PID Output Lag Filter Time	0.0 ~ 2.5	0.0	s	*1
10-11	Feedback Loss Detection Mode	0: Disabled 1: Enabled - Drive Continues to Operate After Feedback Loss 2: Enabled - Drive "STOPS" After Feedback Loss	0	-	
10-12	Feedback Loss Detection Level	0 ~ 100	0	%	
10-13	Feedback Loss Detection Delay Time	0.0 ~25.5	1.0	s	
10-14	Integration Limit Value	0 ~ 109	100	%	*1
10-15	Integral Value Resets to Zero when Feedback Signal Equals the Target Value	0: Disabled 1: 1 Second 30: 30 Seconds (0 ~ 30)	0	-	
10-16	Allowable Integration Error Margin (units)(1unit = 1/8192)	0 ~ 100	0	-	
10-17	PID Sleep Frequency Level	0.00 ~ 650.00	0.00	Hz	
10-18	PID Sleep Function Delay Time	0.0 ~ 25.5	0.0	s	
10-19	PID Wake up frequency Level	0.00 ~ 650.00	0.00	Hz	
10-20	PID Wake up function Delay Time	0.0 ~ 25.5	0.0	s	
10-21	Max PID Feedback Setting	0 ~ 999	100	-	*1
10-22	Min PID Feedback Setting	0 ~ 999	0	-	*1

Group11 – Performance Control functions					
No.	**Description**	**Range**	**Factory Setting**	**unit**	**Note**
11-00	Reverse operation control	0: Reverse command is enabled 1: Reverse command is disabled	0	-	
11-01	Carrier Frequency (kHz)	1 ~ 16	5	KHz	
11-02	Carrier Frequency mode Selection	0: Mode0, 3phase PWM modulation 1: Mode1, 2phase PWM modulation 2: Mode2, 2phase random PWM modulation	0	-	
11-03	Carrier Frequency Auto Reduction due to temperature rise	0: disabled 1: enabled	0	-	
11-04	S-Curve Acc 1	0.0 ~ 4.0	0.00	s	
11-05	S-Curve Acc 2	0.0 ~ 4.0	0.00	s	
11-06	S-Curve Dec 3	0.0 ~ 4.0	0.00	s	
11-07	S-Curve Dec 4	0.0 ~ 4.0	0.00	s	
11-08	Skip Frequency 1	0.00 ~ 650.00	0.00	Hz	*1
11-09	Skip Frequency 2	0.00 ~ 650.00	0.00	Hz	*1
11-10	Skip Frequency 3	0.00 ~ 650.00	0.00	Hz	*1
11-11	Skip Frequency Bandwidth (±)	0.00 ~ 30.00	0.00	Hz	*1

Group12 – Digital Display & Monitor functions					
No.	**Description**	**Range**	**Factory Setting**	**Unit**	**Note**
12-00	Extended Display Mode	00000 ~ 77777 Each digit can be set to 0 to 7	00000	-	*1
		0: Default display (frequency & parameters)			
		1: Output Current			
		2: Output Voltage			
		3: DC voltage			
		4: Temperature			
		5: PID feedback			
		6: Analog Signal Input. (AVI)			
		7: Analog Signal Input. (ACI)			
12-01	PID Feedback Display format	0: Integer (xxx)	0	-	*1
		1: One decimal Place (xx.x)			
		2: Two Decimal Places (x.xx)			
12-02	PID Feedback Display Unit Setting	0: xxx--	0	-	*1
		1: xxxpb (pressure)			
		2: xxxfl (flow)			
12-03	Custom Units (Line Speed) Value	0 ~ 65535	1500/1800	RPM	*1
12-04	Custom Units (Line Speed) Display Mode	0: Drive Output Frequency is Displayed	0	-	*1
		1: Line Speed. Integer.(xxxxx)			
		2: Line Speed..One Decimal Place (xxxx.x)			
		3 :Line Speed.Two Decimal Places (xxx.xx)			
		4: Line Speed.Three Decimal Places (xx.xxx)			

Group12 – Digital Display & Monitor functions					
No.	**Description**	**Range**	**Factory Setting**	**Unit**	**Note**
12-05	Inputs and output Logic status display (I1D to I5D) & RY1	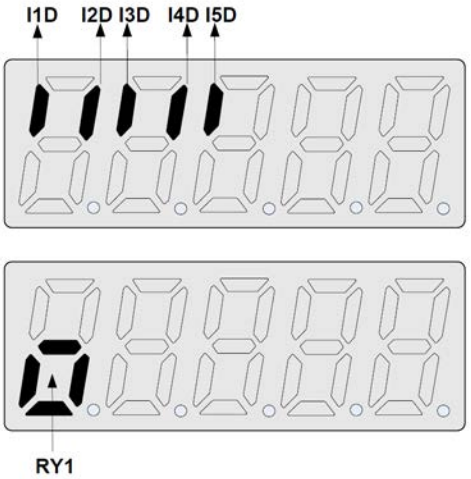	-----	-	*4

Group 13 – Inspection & Maintenance functions					
No.	**Description**	**Range**	**Factory Setting**	**unit**	**Note**
13-00	Drive Power Code	----	-	-	*3
13-01	Software Version	----	-	-	*3*4
13-02	Fault Log (Last 3 Faults)	----	-	-	*3*4
13-03	Accumulated Operation Time 1	0 ~ 23	-	hour	*3
13-04	Accumulated Operation Time 2	0 ~ 65535	----	day	*3
13-05	Accumulated Operation Time Mode	0: Time Under Power 1: Run Mode Time Only	0	-	*3
13-06	Parameter Lock	0: Enable all Functions 1: Preset speeds 05-01 ~ 05-08 cannot be changed 2: All Functions cannot be changed Except for Preset speeds 05-01 ~ 05-08 3: Disable All Function	0	-	
13-07	Parameter Lock Code	00000 ~ 65535	00000	-	
13-08	Reset Drive to Factory Settings	1150: Reset to factory setting. 50Hz system. 1160: Reset to factory setting. 60Hz system.	00000	-	
13-09	Parameter Set Select	0: Complete Parameter Set 1: Simplified Parameter Set	1	-	
F_31	*Parameter Set Select*	*0: Simplified Parameter Set* *1: Complete Parameter Set*	*0*	-	

4.3 Parameter Function Description

Simplified Parameter Set

F_1	Acceleration time 1
Range	【0.1 ~ 3600.0】 s
F_2	Deceleration time 1
Range	【0.1 ~ 3600.0】s

- Preset Acceleration and Deceleration times by above parameters are the time taken for the output frequency to ramp up or ramp down between the Upper and the lower frequency limits.

- **Actual acceleration and deceleration time is calculated as follows:**

$$\text{Actual acceleration time}=\frac{(F_1)\text{x}(\text{set frequency-the minimum starting frequency})}{\text{Maximum output frequency}}$$

$$\text{Actual deceleration time}=\frac{(F_2)\text{x}(\text{set frequency-the minimum starting frequency})}{\text{Maximum output frequency}}$$

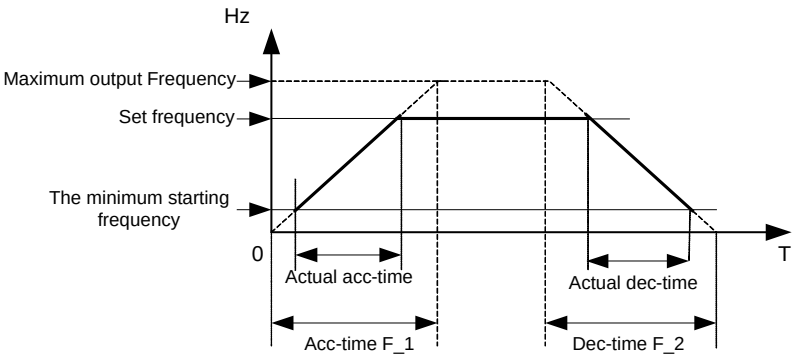

F_3	Operation modes for external terminals
Range	【0】: Forward/stop-reverse/stop 【1】: Run/stop-forward/reverse 【2】: 3-wire control mode run/stop

- F_3 is valid when Run command is set to External mode by F_10 = 1.

2-wire operation mode:

F_3 =【0】Set function of external terminals (F_19 / F_20) to 0 for FWD/Stop or Set to 1 for REV/Stop.

F_3 = 【1】Set function of external terminals (F_19 / F_20) to 0 for Run/Stop or set to 1 for FWD/REV.

3-wire operation mode:

F_3 = 【2】Terminals I1D, I2D, I3D are used in a combination to enable 3 wire run/stop mode. Settings for parameter F_19 / F_20 will not be effective.

F_4	Motor Direction Control
Range	【0】: Forward 【1】: Reverse

- F_4 is valid in keypad mode only.

※Note: When Reverse function is disabled by parameter F_22 = 1, setting F_04 to 1, ” LOC” will be displayed

F_5	Volts/Hz Patterns (V/F)
Range	【1 ~ 7】

- Set F_5 to one of the following preset V/f selections【1 ~ 6】according to the required application.
- Six fixed V/f patterns are shown below.【1 ~ 3】for 50 Hz systems and 【4 ~ 6】for 60 Hz.

TYPE	50Hz		60Hz	
Function	F_5	V/F pattern	F_5	V/F pattern
General Use	=【1】	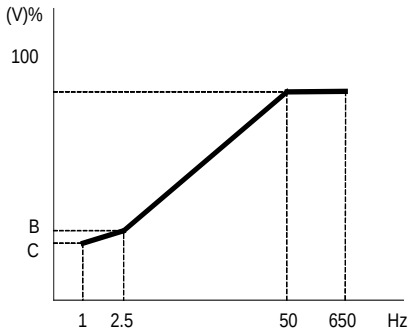	=【4】	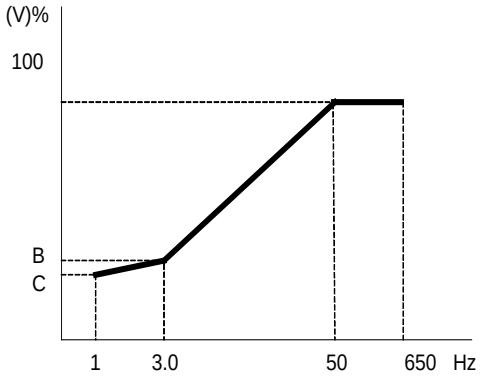
High start torque	=【2】	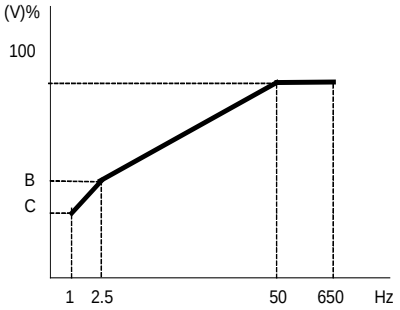	=【5】	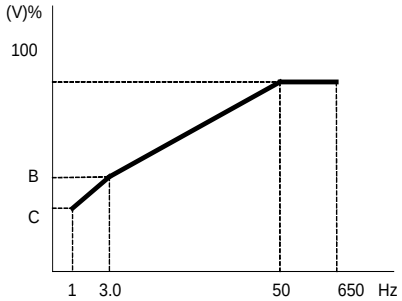
Decreasing torque	=【3】	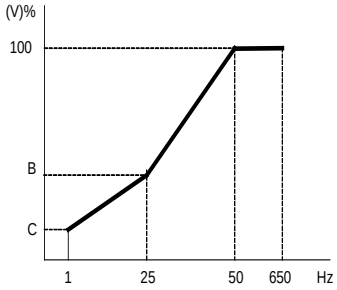	=【6】	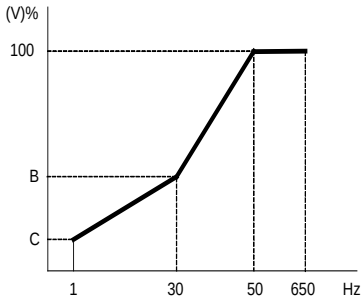

- (V) 100% is the maximum output voltage. B, C point preset % settings will be as table below:-

	F_5	B(Xb)	C(Xc)
	1/4	10%	8%
	2/5	15%	10.5%
	3/6	25%	7.7%

- Setting F_5 = [7] provides a flexible V/F curve which can be selected by experienced users by setting parameters (01-02 ~ 01-09).

F_6	Frequency Upper limit
Range	【0.01 ~ 650.00】Hz
F_7	Frequency Lower limit
Range	【0.00 ~ 649.99】Hz

- When F_7 and the command frequency are both set to 0.00, if RUN is pressed, ”StPO” is displayed.
- When Frequency command is > than preset in F_7 inverter output will ramp up from 0.00 to the command frequency.
- When F_7 > 0, and the frequency command value ≤ F_7, inverter output will ramp up from preset in lower limit to the command frequency.

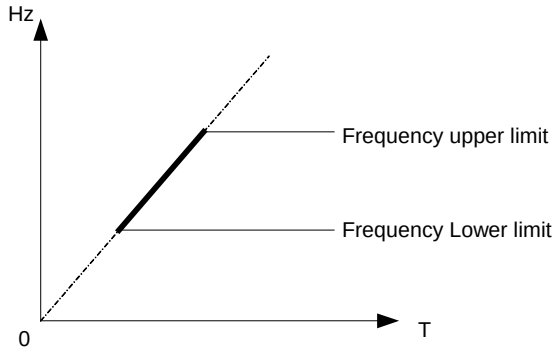

F_8	Preset Speed 0 (Keypad Frequency)
Range	【0.00 ~ 650.00】 Hz

F_9	Jog Frequency
Range	【1.00 ~ 25.00】Hz

- The JOG function is operational by using the multi-function input terminals I1D to I5D. The relevant parameters F_19 for I1D and F_20 for I2D (03-00 ~ 03-04 for all digital inputs) are to be set to 【6】JOG FWD or【7】JOG REV.

F_10	Main Run Command Source selection
Range	【0】: Keypad 【1】: External Run/Stop Control 【2】: Communication

- With parameter F_10 the source will be selected for Main Run Command.

F_11	Main Frequency Command Source Selection
Range	【0】: UP/DOWN of Keypad 【1】: Potentiometer on Keypad 【2】: External AVI Analog Signal Input 【3】: External ACI Analog Signal Input 【4】: External Up/Down Frequency Control 【5】: Communication setting Frequency 【6】: PID Output frequency

F_12	Carrier Frequency
Range	【1 ~ 16】KHz

F_13	Volts/Hz Curve Modification (Torque Boost)
Range	【0 ~ 10.0】%

- Inverter output V / F curve settings for points B, C can be adjusted by parameter F_13 to improve the output torque.
- Calculation of B, C point voltage: B point voltage = Xb × maximum output voltage, C point voltage = Xc × maximum output voltage (Xb, Xc see Page 4-26). When F_13 = 0, the torque improvement is disabled.

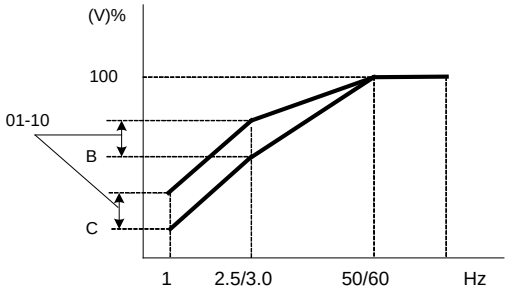

F_14	Stopping Method
Range	【0】: Deceleration to stop. 【1】: Coast to stop.

- F_14 = 【0】: after receiving stop command, the motor will decelerate to stop according to setting of F_2, deceleration time 1.
- F_14 = 【1】: after receiving stop command, the motor will free-run (Coast) to stop.

F_15	DC Injection Brake Time (Sec)
Range	【0.0 ~ 25.5】Sec
F_16	DC Injection Brake Start Frequency (Hz)
Range	【0.10 ~ 10.00】Hz
F_17	DC Injection Brake Level (%)
Range	【0 ~ 20】%

- F_15 / F_16 set the DC injection brake duration and the brake start frequency as shown below.

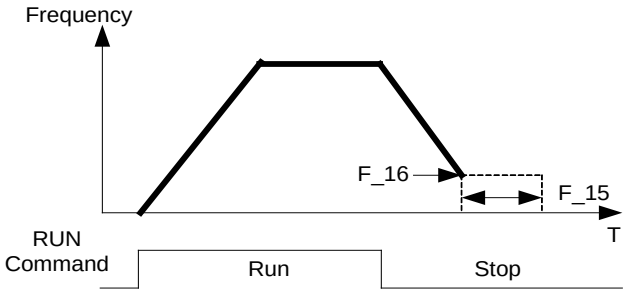

F_18	Motor Rated Current
Range	[A]----------(refer to P. Group 02)

F_19	Multifunction Input Term. I1D
F_20	Multifunction Input Term. I2D
Range	【0】: Forward/Stop Command----------(Parameters F_3/F_10=1) 【1】: Reverse/Stop Command----------(Parameters F_3/F_10=1) 【2】: Preset Speed 1----------(refer to Parameter 05-02) 【3】: Preset Speed 2----------(refer to Parameter 05-03) 【4】: Preset Speed 4----------(refer to Parameter 05-05) 【6】: JOG Forward Command----------(refer to Parameter F_9) 【7】: JOG Reverse Command----------(refer to Parameter F_9) 【8】: Up Command----------(Parameter F_11=4) 【9】: Down Command----------(Parameter F_11=4) 【10】: 2nd Acc./Dec. times 【11】: Disable Acc./Dec. 【12】: Main Run Source Select----------(refer to Parameter F_10) 【13】: Main Frequency Command Select----------(refer to Parameter F_11) 【14】: Rapid Stop (controlled deceleration stop) 【15】: Base Block (Coast to stop) 【16】: Disable PID Function.----------(refer to P. Group10) 【17】: Reset 【18】: Enable Auto Run Mode----------(refer to P. Group 6)

2-wire method Mode 1:

Example: FWD/STOP and REV/STOP from two inputs (I1D & I2D)

Set F_3 =【0】, I1D: F_19 =【0】(FWD/STOP**) , I2D: F_20 =【1】(**REV/STOP**);**

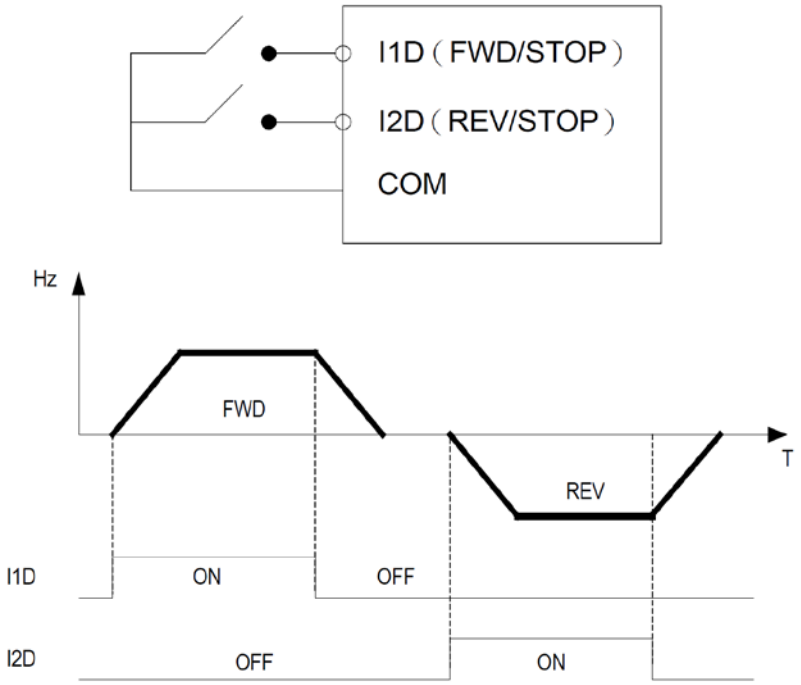

※**Note:** If both forward and reverse commands are ON, it will be treated as a STOP.

2-wire method Mode 2:

Example: RUN/STOP and REV/FWD from two inputs (I1D&I2D)

Set F_3 =【1】; I1D: F_19 =【0】(RUN/STOP**); I2D:F_20 =【1】(**REV/FWD**);**

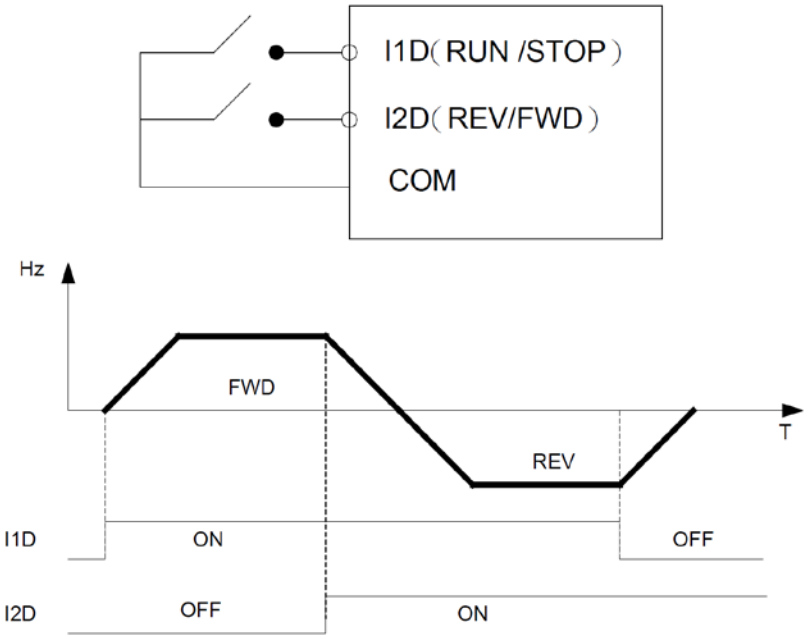

3-wire method

Example: Two separate push buttons for RUN & STOP and a two position switch for FWD/ REV

Set F_3 = 2 (3 wire control mode), then terminals I1D, I2D and I3D are dedicated to this function and Preset selections for parameters F_19, F_20 and 03-02 are not relevant.

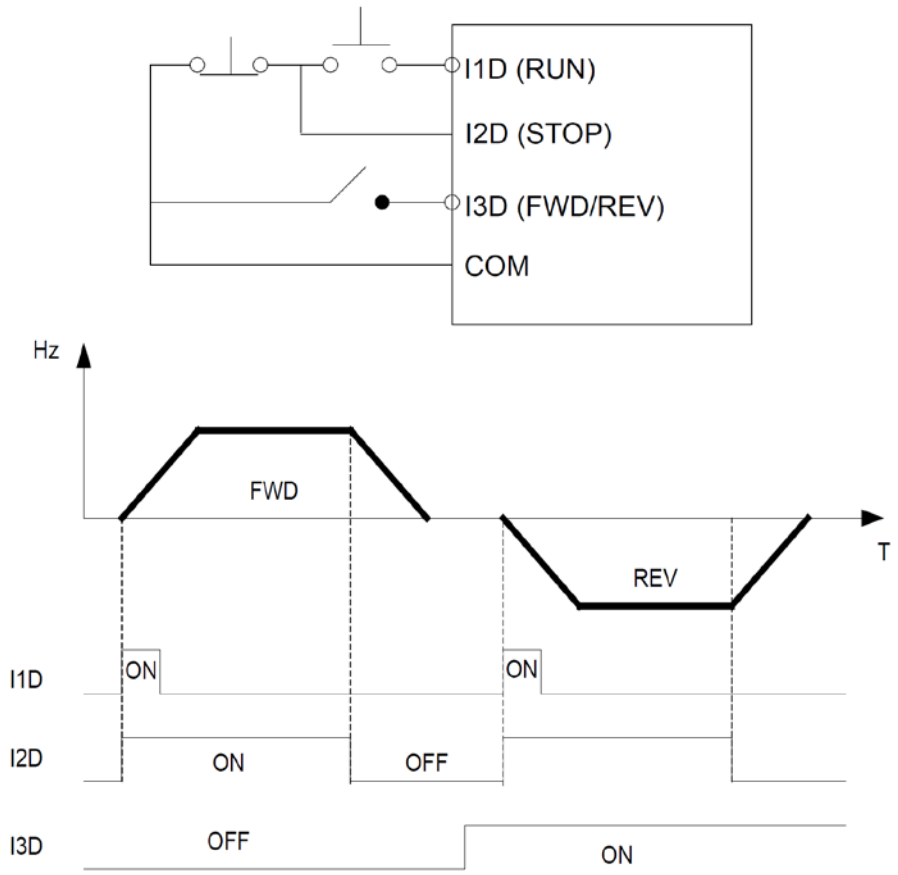

F_21	Multifunction Output Relay RY1 functions (Terminals RB, RA)
Range	【0】: Run 【1】: Fault 【2】: Setting Frequency Reached----------(refer to Parameter 03-14) 【3】: Frequency Reached (3-13±3-14)----(refer to Parameter 03-13/03-14) 【4】: Output Frequency Detection 1 (> 03-13)---(refer to Parameter 03-13) 【5】: Output Frequency Detection 2 (< 03-13)---(refer to Parameter 03-13) 【6】: Auto-Restart 【7】: Momentary AC Power Loss----------(refer to Parameter F_23) 【8】: Rapid Stop (Decelerate to Stop) 【9】: Base Block 【10】: Motor Overload Protection (OL1) 【11】: Drive Overload Protection (OL2) 【12】: Reserved 【13】: Output Current Reached----------(refer to Parameter 03-15/03-16) 【14】: Brake Control----------(refer to Parameter 03-17/03-18)

Output relay RY1, function descriptions:

1) F_21 =【0】, RY1 will be ON with Run signal.

2) F_21 =【1】, RY1 will be ON with inverter Faults.

3) F_21 =【2】, RY1 will be ON when Output Frequency reached Setting Frequency.

F_22	Prevention of Reverse operation
Range	【0】: Reverse command is enabled 【1】: Reverse command is disabled

- F_22 = 1, the reverse command is **disabled**.

F_23	Momentary power loss and restart
Range	【0】: Momentary Power Loss and Restart disable 【1】: Momentary power loss and restart enable

- If the input power supply due to sudden increase in supply demand by other equipment results in voltage drops below the under voltage level, the inverter will stop its output at once.
- When F_23 =【0】, on power loss, the inverter will not start.
- When F_23 =【1】, after a momentary power loss, inverter will restart with the same frequency before power loss, and there is no limitation on number of restarts.
- On power loss, as long as the inverter CPU power is not completely lost, the momentary power loss restart will be effective, restart will be according to setting of parameters F_10 & F_28 and status of External run switch.

Caution: After any power loss if the Run mode is set to External by parameter F_10 = 1 and if Direct start on power up is also selected by parameter F_28 = 0, please note that the inverter will run on resumption of power.

To ensure safety of operators and to avoid any damages to the machinery, all necessary safety measure must be considered, including disconnection of power to the inverter.

F_24	Number of Auto Restart Attempts
Range	【0 ~ 10】

- F_24 =【0】: The inverter will not auto restart after trips due to fault.
- F_24 >【0】, 07-01 =【0】, after a trip due to fault the inverter will run with the same frequency before power loss, and restarts after an internal delay of 0.5 seconds.
- F_24 >【0】, 07-01 >【0】, after a fault trip the inverter will run with the same frequency before power loss, and restart with a delay according the preset in parameter 07-01.
- ***Note: Auto restart after a fault will not work during DC injection braking or decelerating to stop***

F_25	Reset Drive to Factory Settings
Range	【1150】: Reset to the 50Hz factory setting 【1160】: Reset to the 60Hz factory setting

- When a Parameter lock key number has been entered in parameter 13–07. This key number must be entered first before parameter F_25 can be used.

Frequency of the step 0 is set by parameter F_8 Keypad Frequency.	
F_26	Auto _ Run Mode Frequency Command 1
F_27	Auto _ Run Mode Frequency Command 2
Range	【0.00 ~ 650.00】Hz

- Auto Run sequencer mode has to be enabled by using one of the multifunctional inputs I1D and I2D and setting the relevant parameter F_19 and F_20 to selection【18】.
- Various Auto Run (sequencer) modes can be selected by parameter 06-00.
- 2 Auto Run (sequencer) modes can be selected by parameters F_26 and F_27.
- Auto Run frequency commands 1 and 2 are set with parameters F_26 and F_27.
- Sequence run times are set with parameters 06-17 and 06-18.
- FWD/REV Direction for each sequence can be set with parameters 06-33 and 06-34.
- Auto sequence 0, frequency is set from keypad by parameter F_8, sequence run time and direction are set by parameters 06-16 and 06-32.

Auto RUN (Auto Sequencer) examples are shown in the following pages:

Example Single Cycle (06-00 = 1, 4)

The inverter will run for a single full cycle based on the specified number of sequences, then it will stop. In this example 3 sequences are set in forward direction.

Auto Run Mode: 06- 00 =【1】or【4】

Frequency: F_8=【15】Hz, F_26 =【30】Hz, F_27 =【50】Hz

Sequence Run Time: 06-16 =【20】s, 06-17 =【25】s, 06-18=【30】s,

Direction FWD: 06-32 =【1】, 06-33 =【1】, 06-34 =【1】

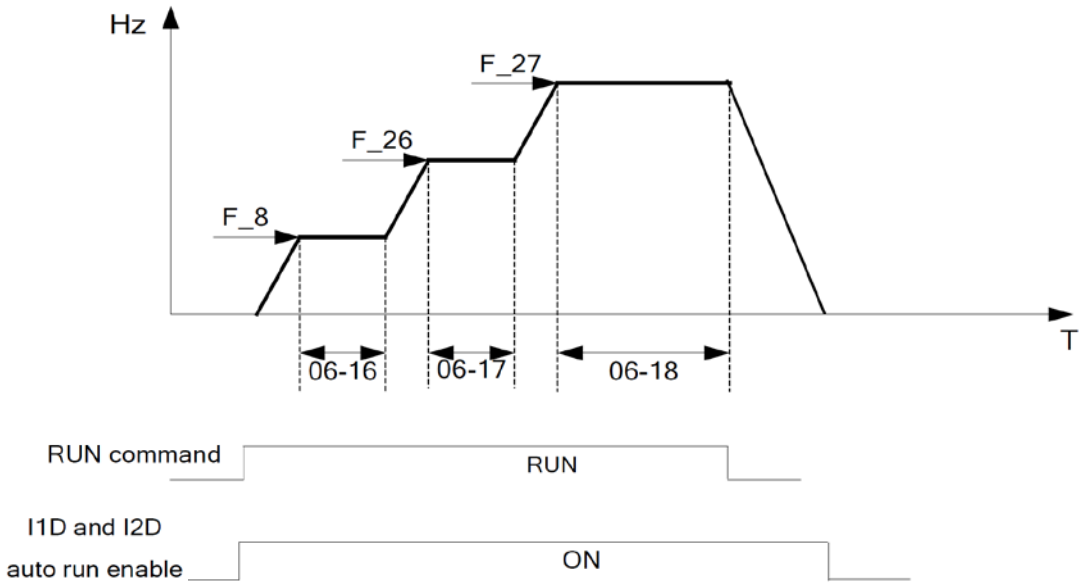

F_28	Direct Running on Power Up
Range	【0】: Enable Direct running after power up 【1】: Disable Direct running after power up

- When direct run on power up is selected by F_28 = 0 and the inverter is set to external run by F_10 = 1, if the run switch is ON as power is applied, the inverter will auto start.
  It is recommend that the power is turned off and the run switch is also off to avoid possibility of injury to operators and damage to machines as the power is reapplied.

Note: If this mode is required all safety measures must be considered including warning labels.

- When direct run on power up is disabled by F_28 = 1 and if the inverter is set to external run by F_10 = 1, if the run switch is ON as power is applied, the inverter will not auto start and the display will flash with STP1. It will be necessary to turn OFF the run switch and then ON again to start normally.

F_29	Software Version
Range	----

F_30	Fault Log Display (Latest 3 faults)
Range	----

- Last three faults are stored in a stack and whenever there is a new fault the previous faults are pushed down the stack. So the fault stored in 2.xxx will be transferred to 3.xxx, and the one in 1.xxx to 2.xxx. The recent fault will be stored in the empty register 1.xxx.
- Use Up▲- and Down▼ keys to scroll between the faults registers.
- Pressing reset key when parameter F_30 is displayed then all three fault registers will be cleared and the display for each register will change to 1. ---, 2. ---, 3. ---.
- E.g. fault log content is ‘1.OC-C’; this indicates the latest fault is OC-C, etc.

F_31	Parameter Set Select
Range	【0】: Simplified Parameter Set 【1】: Complete Parameter Set

※Note: When F_31 is set to 1 the inverter shows the Complete Parameter Set. To get back to the Simplified Parameter Set, 13-09 has to be set to 1.

Complete Parameter Set

00 – Basic Parameter Group

00-01	Motor Direction Control
Range	【0】: Forward 【1】: Reverse

➢ 00-01 Is valid in key pad mode only.

※Note: When Reverse function is disabled by parameter 11-00 = 1 and 00-01 is set to 1 ” LOC” will be displayed

00-02	Main Run Command Source selection
00-03	Alternative Run Command Source selection
Range	【0】: Keypad 【1】: External Run/Stop Control 【2】: Communication

➢ Parameter 00-02 / 00-03 sets the inverter operation command source. For switching between 00-02 and 00-03, use any of the external inputs I1D to I5D and set the relevant parameters (03-00 ~ 03-04) to [12], refer to parameter group3.

00-04	Operation modes for external terminals
Range	【0】: Forward/stop - reverse/stop 【1】: Run/stop - forward/reverse 【2】: 3-wire control mode - run/stop

➢ 00-04 is valid when Run command is set to External mode by 00-02 / 00-03 = 1.

2-wire operation mode:

Set 00-04 =【0/1】first, before setting (03-00, 03-04) to [0] or [1]

00-04 = 【0】Set external terminals (03-00 to 03-04) function to 0 for FWD/Stop or Set to 1 for REV/Stop.

00-04 = 【1】Set external terminals (03-00 to 03-04) function to 0 for Run/Stop or Set to 1 for FWD/REV.

3-wire operation mode:

00-04 =【2】Terminals I1D, I2D, I3D are used in a combination to enable 3 wire run/stop mode. Settings for 03-00, 03-01, 03–02 will not be effective (refer to Group 03).

00-05	Main Frequency Command Source Selection
00-06	Alternative Frequency Command Source Selection
Range	【0】: UP/DOWN of Keypad 【1】: Potentiometer on Keypad 【2】: External AVI Analog Signal Input 【3】: External ACI Analog Signal Input 【4】: External Up/Down Frequency Control 【5】: Communication setting Frequency 【6】: PID Output frequency

➢ When 00-06 = [6], frequency command source is output of the PID.

00-07	Main and Alternative Frequency Command Modes
Range	【0】: Main Or Alternative Frequency. 【1】: Main frequency + Alternative Frequency

➢ When 00-07 =【0】, the frequency source is set by the **Main frequency** parameter 00-05 (Default) or by the **Alternative frequency** parameter 00-06.

Use any of the external terminals I1D to I5D and set the relevant parameter 03-00 to 03-04 =【13】to switch from **Main** to **Alternativ**e source.

➢ When 00-07 =【1】the Frequency command will be the result of setting of Main & Alternative Frequencies.

00-08	Communication Frequency Command
Range	【0.00 ~ 650.00】Hz

➢ This parameter can be used to set frequency command
➢ This parameter can be used to read the set frequency in communication mode
➢ This parameter is only effective in the communication mode.

00-09	Frequency Command save on power down (Communication mode)
Range	【0】: Disable 【1】: Enable

➢ 00-09 =【0】 Keypad frequency is saved.
➢ 00-09 =【1】 Frequency set by communication is saved.

00-10	Initial Frequency Selection
Range	【0】: By Current Freq Command 【1】: By Zero Freq Command 【2】: By 00-11
00-11	**Initial Frequency Setpoint**
Range	【0.00 ~ 650.00】Hz

➢ This parameter is only effective in keypad mode..
➢ When 00-10 =【0】,the initial frequency will be current frequency.
➢ When 00-10 =【1】,the initial frequency will be 0.
➢ When 00-10 =【2】,the initial frequency will be as set by parameter 00-11.

00-12	Frequency Upper limit
Range	【0.01 ~ 650.00】Hz
00-13	Frequency Lower limit
Range	【0.00 ~ 649.99】Hz

- When 00-13 and the command frequency are both set to 0.00, if RUN is pressed ” Stop” is displayed.
- When Frequency command is > than preset in 00-13 inverter output will ramp up from 0.00 to the command frequency.
- When 00-13 > 0, and the frequency command value ≤ 00-13, inverter output will ramp up from preset in lower limit to the command frequency.

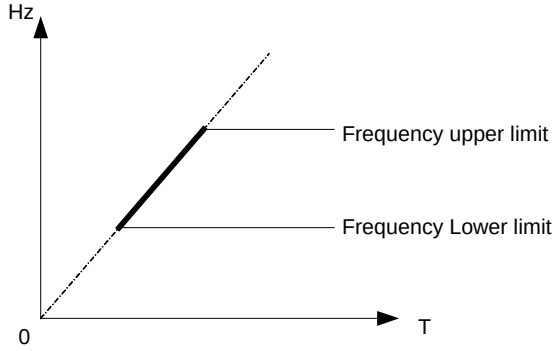

00-14	Acceleration time 1
Range	【0.1 ~ 3600.0】s
00-15	Deceleration time 1
Range	【0.1 ~ 3600.0】s
00-16	Acceleration time 2
Range	【0.1 ~ 3600.0】s
00-17	Deceleration time 2
Range	【0.1 ~ 3600.0】s

- Preset Acceleration and Deceleration times by above parameters are the time taken for the output frequency to ramp up or ramp down between the Upper and the lower frequency limits.

- **Actual acceleration and deceleration time is calculated as follows:**

$$\text{Actual acceleration time}=\frac{(00\text{-}14)\text{x}(\text{set frequency-the minimum starting frequency})}{\text{Maximum output frequency}}$$

$$\text{Actual deceleration time}=\frac{(00\text{-}15)\text{x}(\text{set frequency-the minimum starting frequency})}{\text{Maximum output frequency}}$$

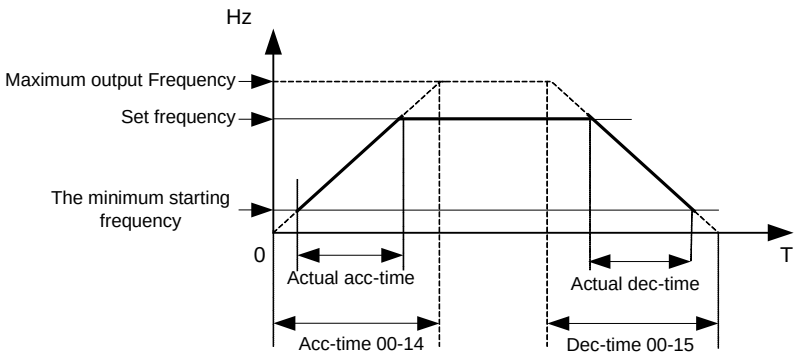

00-18	Jog Frequency
Range	【1.00 ~ 25.00】Hz
00-19	Jog Acceleration Time
Range	【0.1 ~ 3600.0】s
00-20	Jog Deceleration Time
Range	【0.1 ~ 3600.0】s

- The JOG function is operational by using the multi-function input terminals I1D to I5D and setting the relevant parameters 03-00 ~ 03-04 to 【6】JOG FWD or【7】JOG REV. Refer to parameter group 3.

01 – V/F command group	
01-00	**Volts/Hz Patterns (V/F)**
Range	**【1~7】**

- Set 01-00 to one of the following preset V/f selections 【1 ~ 6】according to the required application.
- Parameters 01-02 ~ 01-09 are not applicable.
- Six fixed V/f patterns are shown below.【1 ~ 3】for 50 Hz systems and 【4 ~ 6】for 60 Hz.

TYPE	50Hz		60Hz	
Function	**01-00**	**V/F pattern**	**01-00**	**V/F pattern**
General Use	**=【1】**	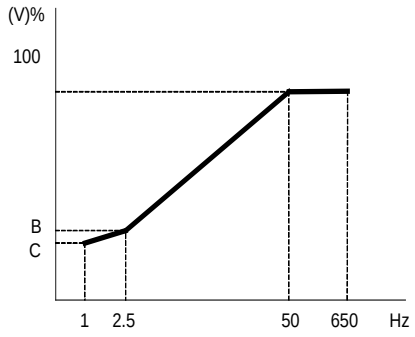	**=【4】**	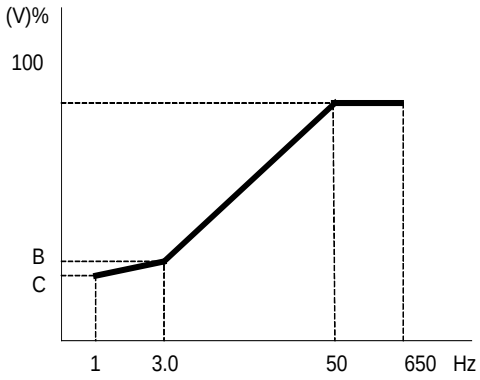
High start torque	**=【2】**	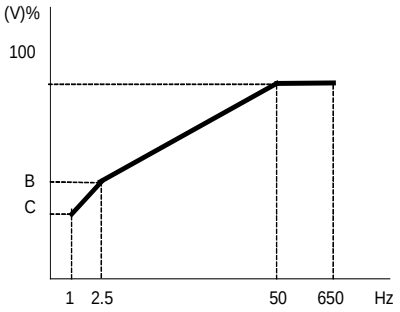	**=【5】**	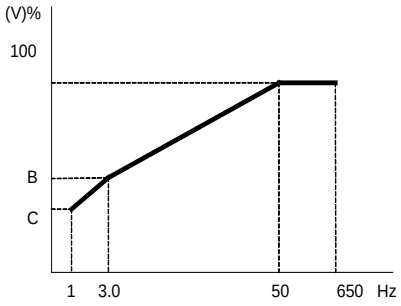
Decreasing torque	**=【3】**	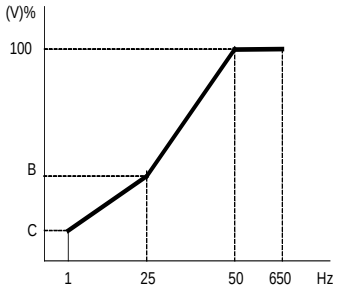	**=【6】**	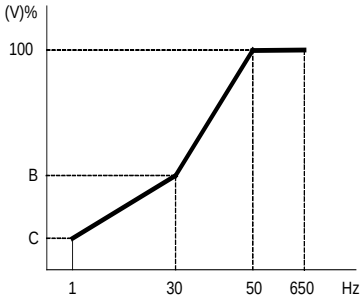

- (V) 100% is the maximum output voltage. B, C point preset % settings will be as table below:-

	01-00	B(Xb)	C(Xc)
	1/4	**10%**	**8%**
	2/5	**15%**	**10.5%**
	3/6	**25%**	**7.7%**

- Setting 01-00 = [7] provides a flexible V/F curve which can be selected by experienced users by setting parameters (01-02 ~ 01-09).

01-01	V/f Maximum voltage
Range	【198.0 ~ 256.0】V
01-02	Maximum Frequency
Range	【0.20 ~ 650.00】Hz
01-03	Maximum Frequency Voltage Ratio
Range	【0.0 ~ 100.0】%
01-04	Medium Frequency 2
Range	【0.10 ~ 650.00】Hz
01-05	Medium Frequency Voltage Ratio 2
Range	【0.0 ~ 100.0】%
01-06	Medium Frequency 1
Range	【0.10 ~ 650.00】Hz
01-07	Medium Frequency Voltage Ratio 1
Range	【0.0 ~ 100.0】%
01-08	Minimum Frequency
Range	【0.10 ~ 650.00】Hz
01-09	Minimum Frequency Voltage Ratio
Range	【0.0 ~ 100.0】%

- Max output frequency depends on parameter 01-00. For 01-00=【7】It can be set by parameter 01-02.
- For 01-00 ≠【7】, the maximum output frequency will depending on parameter 00-12, frequency upper limit.

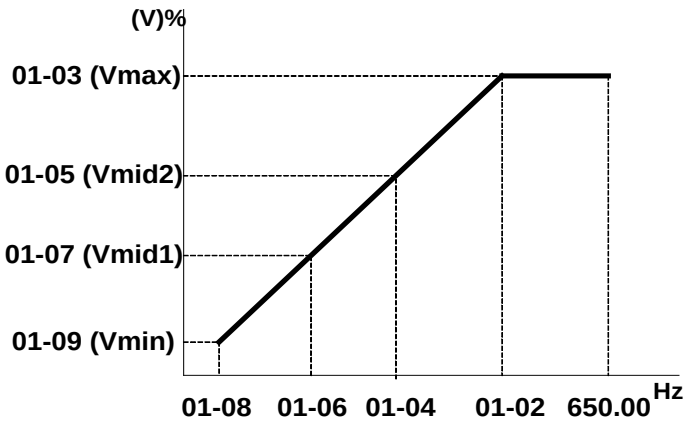

01-10	Volts/Hz Curve Modification (Torque Boost)
Range	【0 ~ 10.0】%

- Inverter output V / F curve settings for points B, C can be adjusted by parameter 01-10 to improve the output torque.
- Calculation of B, C point voltage: B point voltage = Xb × maximum output voltage, C point voltage = Xc × maximum output voltage (Xb, Xc see Page 4-39). When 01-10 = 0, the torque improvement is disabled.

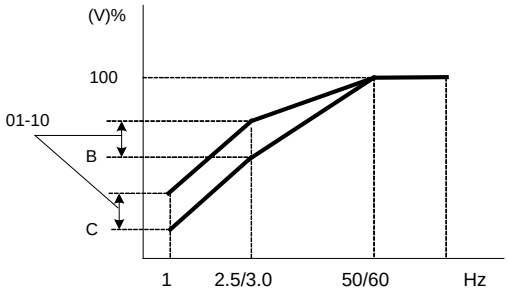

01-11	V/F start Frequency
Range	【0.00 ~10.00】Hz

02 – Motor parameter group

02-00	Motor no load current
Range	----
02-01	Motor Rated Current
Range	----
02-02	Motor rated Slip Compensation
Range	【0.0 ~ 100.0】(%)
02-03	Motor Rated Speed
Range	----
02-04	Motor Rated Voltage
Range	----

- When the load causes the actual motor speed to be reduced below the speed set by inverter output frequency (Slip), parameter 02-02 Slip compensation can be used to correct the speed.

$$\text{Slip compensation boost}=\frac{\text{Output Current-(02-00)}}{\text{(02-01)-(02-00)}}\text{x(02-02)xRate motor slip}$$

Motor slip = Motor synchronous speed- Motor Rated Speed

$$\text{(02-02)approximate Value}=\frac{\text{Motor synchronization speed-Rated speed}}{\text{Motor synchronization speed}}$$

$$\text{Example: 4 poles, 60Hz induction motor synchronization speed}=\frac{120}{4}\text{ x 60=1800(RPM)}$$

※Note: 02-00 / 02-01 differs with the inverter capacities (13-00). It should be regulated according to actual conditions.

03 – External digital inputs & Relay output functions

03-00	Multifunction Input Term. I1D
03-01	Multifunction Input Term. I2D
03-02	Multifunction Input Term. I3D
03-03	Multifunction Input Term. I4D
03-04	Multifunction Input Term. I5D
Range	【0】: Forward/Stop Command----------(P. 00-02/00-03=1; refer to P. 00-04) 【1】: Reverse/Stop Command----------(P. 00-02/00-03=1; refer to P. 00-04) 【2】: Preset Speed 1----------(refer to P. 05-02) 【3】: Preset Speed 2----------(refer to P. 05-03) 【4】: Preset Speed 4 ----------(refer to P. 05-04) 【6】: JOG Forward Command----------(refer to P. 00-18~00-20) 【7】: JOG Reverse Command----------(refer to P. 00-18~00-20) 【8】: Up Command---------- (P. 00-05/00-06=4; refer to P. 03-06/03-07) 【9】: Down Command----------(P. 00-05/00-06=4; refer to P. 03-06/03-07) 【10】: 2nd Acc/Dec times 【11】: Disable Acc/Dec 【12】: Main/ Alternative run source Select----------(refer to P. 00-02/00-03) 【13】: Main/Alternative Frequency Command Select-----(refer to P. 00-05/00-06) 【14】: Rapid Stop (controlled deceleration stop) 【15】: Base Block (Coast to stop) 【16】: Disable PID Function.----------(refer to P. Group 10) 【17】: Reset 【18】: Enable Auto Run Mode----------(refer to P. Group 06)

Various example settings and descriptions for Parameters 03-00 to 03-04 are noted in the following pages seconds from 1 to 13.

1) For setting parameters 03-00 ~ 03-04 to【0, 1】External Run/Stop Control, refer to 00-04.

2-wire method Mode 1:

Example: FWD/STOP and REV/STOP from two inputs (I1D & I2D)

Set 00-04=【0】, I1D: 03-00=【0】(FWD/STOP**), I2D: 03-01=【1】(**REV/STOP**);**

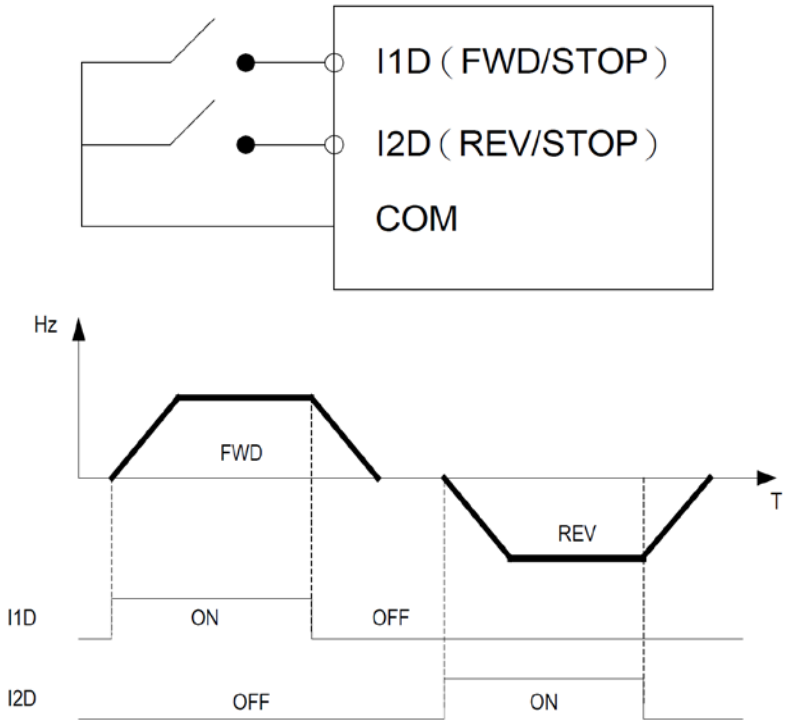

※**Note:** If both forward and reverse commands are ON, it will be treated as a STOP.

2-wire method Mode 2:

Example: RUN/STOP and REV/FWD from two inputs (I1D&I2D)

Set 00-04 =【1】; I1D: 03-00 =【0】(RUN/STOP**); I2D: 03- 01 =【1】(**REV/FWD**);**

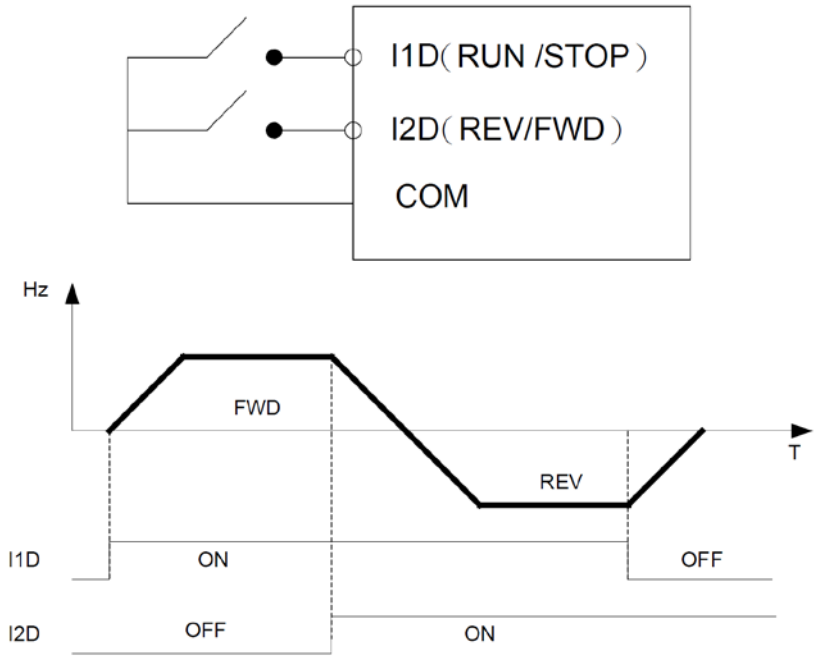

3-wire method:

Example: Two separate push buttons for RUN & STOP and a two position switch for FWD/ REV

Set 00-04 =2 (3 wire control mode), then terminals I1D, I2D and I3D are dedicated to this function and Preset selections for parameters 03-00, 03-01 and 03-02 are not relevant.

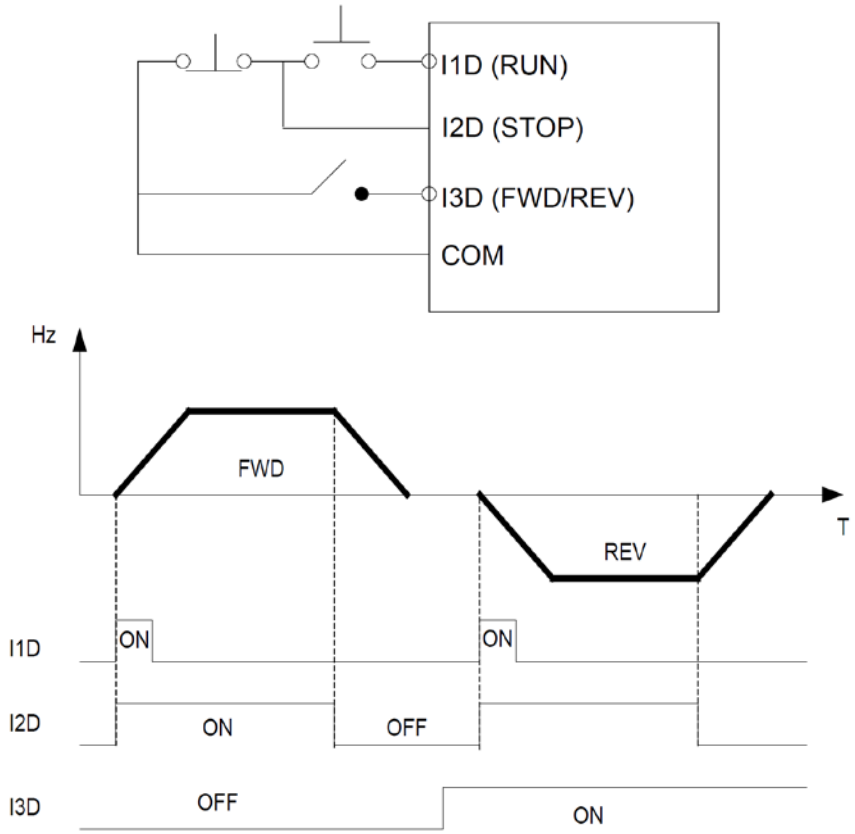

2) Parameters 03-00 ~ 03-04=【2, 3, 4】Preset speed selections.

Combination of any three terminals from I1D~I5D can be used to select preset speeds 0 to 7 according to the table below.
Preset speed 0-7 and the related acceleration/decelerating times should be set in parameter group 5.
For example timing diagram refer to Group 5 description.

Preset speed	Function setting and state of any three (A,B,C) of terminal I1D~I5D			Frequency	Acc-time	Dec-time
	terminal A=2	terminal B=3	terminal C=4			
speed 0	OFF	OFF	OFF	05-01	05-17	05-18
speed 1	OFF	OFF	ON	05-02	05-19	05-20
speed 2	OFF	ON	OFF	05-03	05-21	05-22
speed 3	OFF	ON	ON	05-04	05-23	05-24
speed 4	ON	OFF	OFF	05-05	05-25	05-26
speed 5	ON	OFF	ON	05-06	05-27	05-28
speed 6	ON	ON	OFF	05-07	05-29	05-30
speed 7	ON	ON	ON	05-08	05-31	05-32

3) 03-00 ~ 03-04 =【6, 7】Forward/ Reverse JOG

When an input terminal is set to function【6】and is turned ON, inverter will work in jog forward mode.

When an input terminal is set to function【7】and is turned ON, inverter will work in jog reverse mode.

Note: if jog forward and jog reverse function is enabled at the same time, inverter will enter stop mode.

4) 03-00 ~ 03-04 =【8, 9】UP/DOWN

When an input terminal is set to function【8】and is turned ON, frequency command is increased according to the UP/DOWN , increment/decrement step set in parameter 03-06.
If the input is kept on continuously, the frequency command increases accordingly until the upper frequency limit is reached.

When an input terminal is set to function【9】and is turned ON, frequency command decreases according to the UP/DOWN increment/decrement step set in parameter 03-06.
If the input is kept on continuously, the frequency command decreases accordingly and in relation to settings for parameter 03-06 and 3-07 until Zero speed is reached.
Refer to group 3 parameter description.

5) 03-00 ~ 03-04 =【10】 2nd Acc/Dec time

When an input terminal is set to function【10】and is turned ON, the actual acceleration and deceleration time will be according to the time for 2nd Acc./Dec. set in parameters 00-16 and 00-17.
If the input is turned off, the acceleration and deceleration times will be according to the default Acc./Dec. 1 set in parameters 00-14 & 00-15.

6) 03-00 ~ 03-04 =【11】 Disable Acc/Dec function

When an input terminal is set to function【11】and is turned on, acceleration and deceleration function will be disabled and the frequency at the time is maintained (constant speed mode).
If the input is turned off, acceleration and deceleration function is enabled again.

For an example see the following diagram.

Accel./Decel. & Enable/Disable timing diagram using terminal I1D and parameter 03-00 = 11.

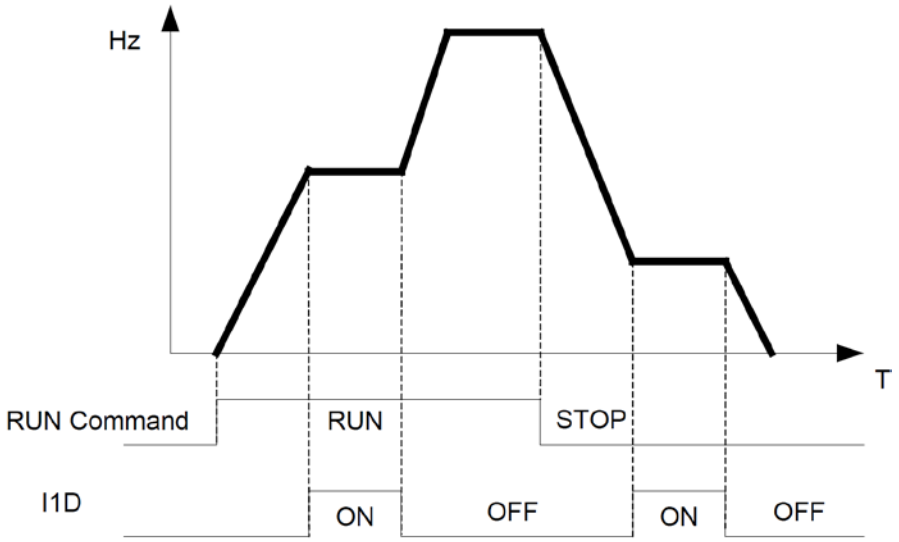

7) 03-00 ~ 03-04 =【12】Main/ Alternative run source select.

When an input terminal is set to function【12】and is turned on, the run command source is according to parameter 00-03(Alternative Run source).If the Input is off it will be according to 00-02 (Main run source).

8) 03-00 ~ 03-04 =【13】Main/ Alternative Frequency source Select

When an input terminal is set to function【13】and is turned on, the frequency source is according to parameter 00-06(Alternative Frequency source).If the Input is off it will be according to 00-05 (Main Frequency source).

9) 03-00 ~ 03-04 =【14】 Rapid Stop (controlled deceleration stop)

When an input terminal is set to function【14】and is turned ON, inverter decelerates to stop.

10) 03-00 ~ 03- 04=【15】Base Block (Coast to stop)

When an input terminal is set to function【15】and is turned ON, inverter output is turned OFF.

11) 03-00 ~ 03-04 =【16】Disable PID Function.

When an input terminal is set to function【16】and is turned on, PID functions is disabled, if it is turned Off, PID function is enabled again.

12) 03-00 ~ 03-04 =【17】Reset

When a failure that can be manually reset occurs, turn on a terminal with function 【17】, the failure will be reset. (Same function as the Reset button on keypad).

13) 03-00 ~ 03-04 =【18】Auto _ Run Mode

When an input terminal is set to function【18】, the programmable auto- sequencer function is enabled, Refer to description of parameter group 6.

03-06	Up/Down frequency step
Range	【0.0　5.00】Hz

Example：I1D：03- 00 =【8】Up frequency command, I2D：03-01 =【9】Down frequency command, 03- 06 =【△】Hz

Mode1：If UP or DOWN input terminals are turned on for less than 2 seconds, for every On-operation frequency changes by △Hz.

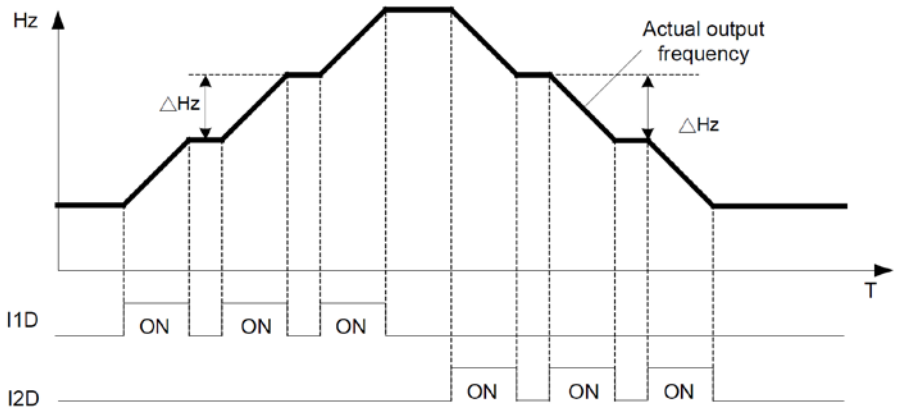

Mode 2：If UP or DOWN input terminals are turned on for more than 2 seconds, the original UP/DOWN mode is restored Output frequency Ramps up or down as long as the input is kept ON as shown in the diagram below:

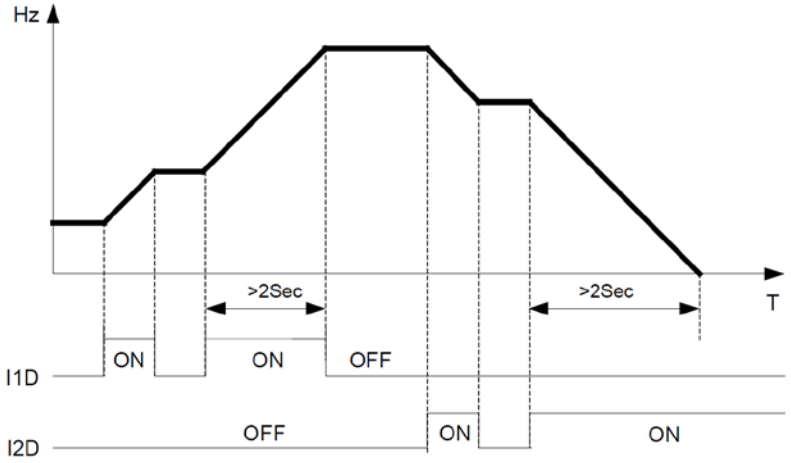

03-07	Up/Down keep Frequency status after a stop command
Range	**【0】: After a stop command in Up/Down mode, the preset frequency is held as the inverter stops, and the UP/Down function is disabled.** **【1】: After a stop command in Up/Down mode, the preset frequency is reset to 0 Hz as the inverter stops.** **【2】: After a stop command in Up/Down mode, the preset frequency is held as the inverter stops, and the UP/Down function remains enabled.**

- 03-07 =【0】, 【2】When run signal is removed (Stop Command), the output frequency is stored in parameter 05-01 (Keypad Frequency).
- 03-07 =【0】In stop mode since frequency can not be increased or decreased from Up/Down terminals then keypad can be used to change the frequency by modifying parameter 05-01.
- 03-07 =【1】In Up/down frequency mode inverter will ramp up from 0Hz on Run command and Ramp down to 0 Hz on stop command.

03-08	Multifunction terminals S1 ~ S5 scan time
Range	【1 ~ 200】 ms

- Multifunction input terminal On/Off periods will be scanned for the number of cycles according to the set value in parameter 03-08. If the signal status for On or Off period is less than the set period it will be treated as noise.
- Scan period unit is 1ms.
- Use this parameter if unstable input signal is expected, however setting long scan time periods results in slower response times.

03- 09	I1D ~ I5D Input type selection NO & NC			
Range	【xxxx0】: I1D	NO	【xxxx1】: I1D	NC
	【xxx0x】: I2D	NO	【xxx1x】: I2D	NC
	【xx0xx】: I3D	NO	【xx1xx】: I3D	NC
	【x0xxx】: I4D	NO	【x1xxx】: I4D	NC
	【0xxxx】: I5D	NO	【1xxxx】: I5D	NC

- (NO) Normally Open, (NC) Normally Closed. Select as required.
- For selecting Normally Open (NO) or Normally Closed (NC) set the relevant digit in parameter 03-09 to 0 or to 1 as required.
- Set Parameter 03-09 first before you use the Parameters 00-02/00-03 = 1 to set the inverter run mode to External multifunction inputs.

03-11	Multifunction Output Relay RY1 functions (Terminals RB, RA)
Range	【0】: Run 【1】: Fault 【2】: Setting Frequency Reached----------(refer to P. 03-14) 【3】: Frequency Reached (3-13 ± 3-14)----------(refer to P. 03-13/03-14) 【4】: Output Frequency Detection 1 (> 03-13) ----------(refer to P. 03-13) 【5】: Output Frequency Detection 2 (< 03-13) ----------(refer to P. 03-13) 【6】: Auto-Restart 【7】: Momentary AC Power Loss----------(refer to P. 07-00) 【8】: Rapid Stop (Decelerate to Stop) 【9】: Base Block 【10】: Motor Overload Protection (OL1) 【11】: Drive Overload Protection (OL2) 【12】: Reserved 【13】: Output Current Reached----------(refer to P. 03-15/03-16) 【14】: Brake Control----------(refer to P. 03-17/03-18)
03-13	Frequency Detection Level
Range	【0.00 ~ 650.00】 Hz
03-14	Frequency Detection Width
Range	【0.00 ~ 30.00】 Hz

Output relay RY1, function descriptions:

1) 03-11 =【0】, RY1 will be ON with Run signal.

2) 03-11 =【1】, RY1 will be ON with inverter Faults.

3) 03-11 =【2】, RY1 will be ON when Output Frequency reached Setting Frequency.

When Output Freq. = Setting Frequency － Frequency Detection Width (03-14), Relay Output will be ON.

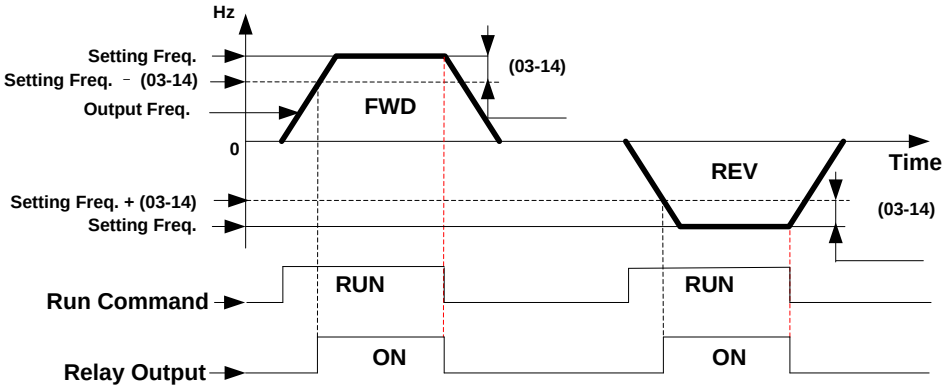

Example：Setting Freq. = 30, and Frequency Detection Width (03-14) = 5,
Relay will be ON when output frequency reached 25 Hz to 30 Hz and Run Command is on (Allowable tolerance ± 0.01).

4) 03-11 =【3】, RY1 will be ON when Setting Frequency and Output Frequency are within a bandwidth of Frequency Detection Level +/- Frequency Detection With (03-13 +/- 03-14).

When Frequency Detection Range Lower Limit**<Setting Freq.<**Frequency Detection Range Upper Limit
And, Frequency Detection Range Lower Limit**<Output Freq.<**Frequency Detection Range Upper Limit，
Relay output will be ON（Allowable tolerance ±0.01）

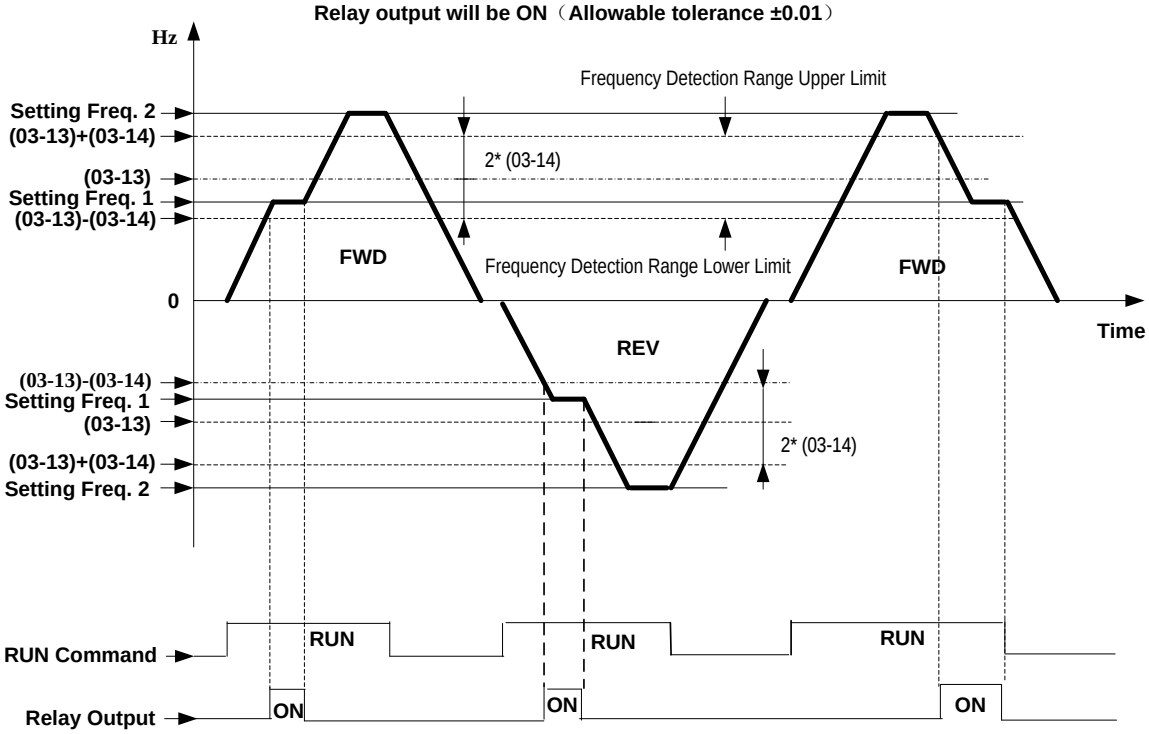

Example: Frequency Detection Level (03-13) = 30, and Frequency Detection Width (03-14) = 5 cause Frequency Detection Range upper limit = 35, and Frequency Detection Range lower limit = 25. So RY1 will be on when Setting Freq. and Output Freq. are both under these limits; on the other hand, RY1 will be off when Setting Freq. and Output Freq. are not under these limits either.

5) 03-11 =【4】, RY1 will be on while Output Freq. > Frequency Detection Level (03-13).

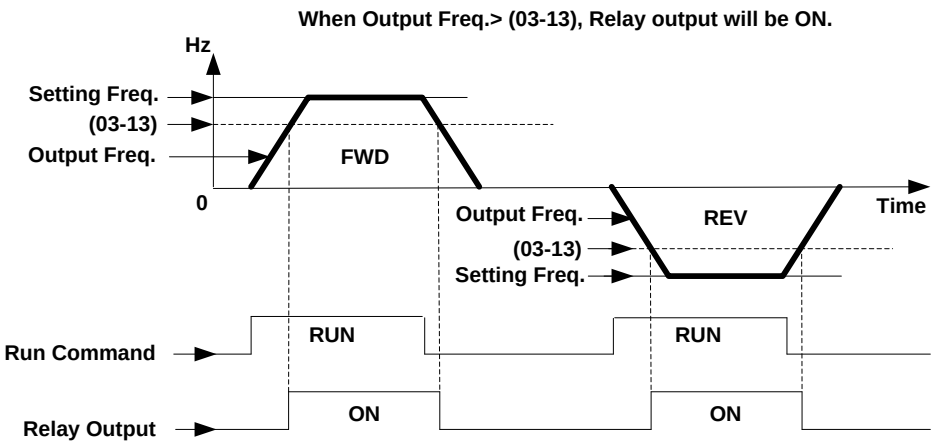

6) 03-11 =【5】. RY1 will be on while Output Freq. < Frequency Detection Level (03-13).

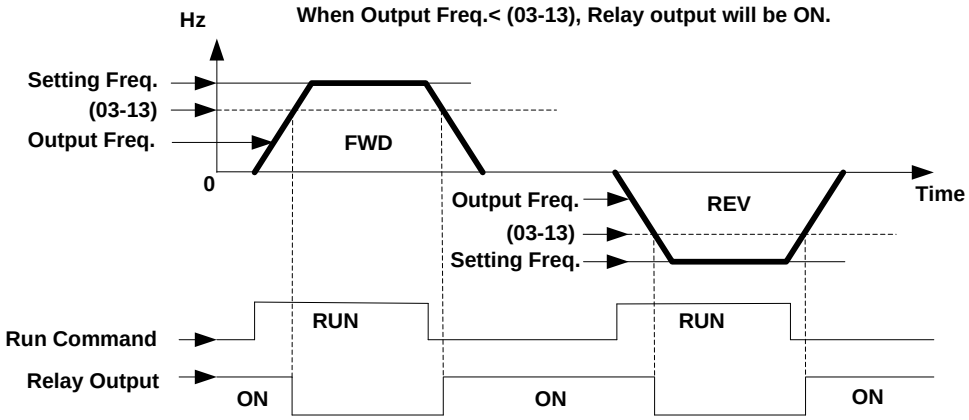

03-15	Output Current Detection Level
Range	【0.1 ~ 15.0】A
03-16	Output Current Detection Period
Range	【0.1 ~ 10.0】Sec

- **03-11 =【13】**, RY1 will be ON as soon as the output current value > Output current detection level setting (03-15).
- 03-15: Setting range (0.1 ~ 15.0 A) as required according to the rated motor current.
- 03-16: Setting range (0.1 ~ 10.0 sec.).

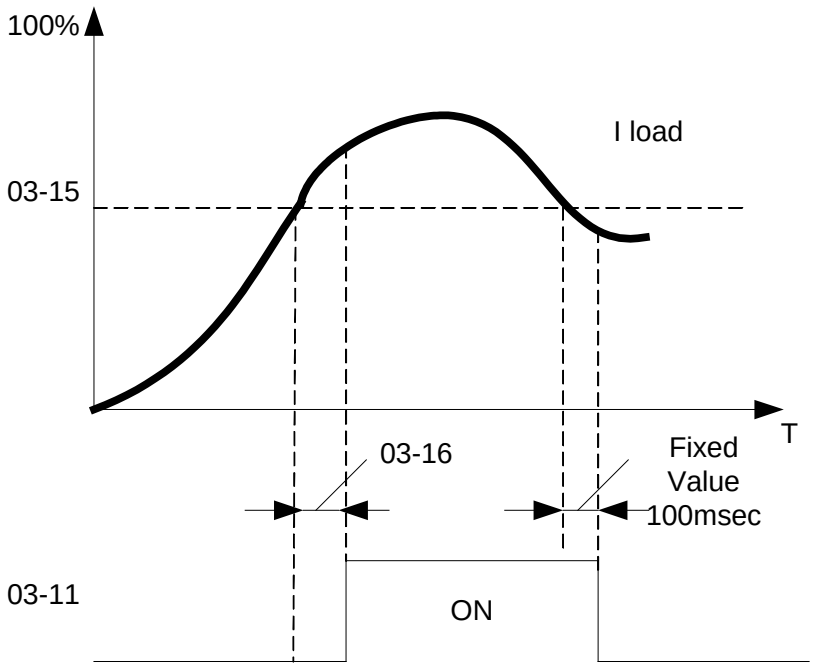

03-17	Brake Release Level
Range	【0.00 ~ 20.00】 Hz
03-18	Brake Engage Level
Range	【0.00 ~ 20.00】 Hz

- If 03-11 = **【14】**
- In accelerating mode. RY1 will be ON as soon as the actual output frequency reaches the external Brake release level set in parameter 03-17.
- In decelerating mode, RY1 will be OFF as soon as the actual output frequency reaches the external Brake engage level set in parameter 03-18.

Timing diagram for 03-17 < 03-18 is shown below:

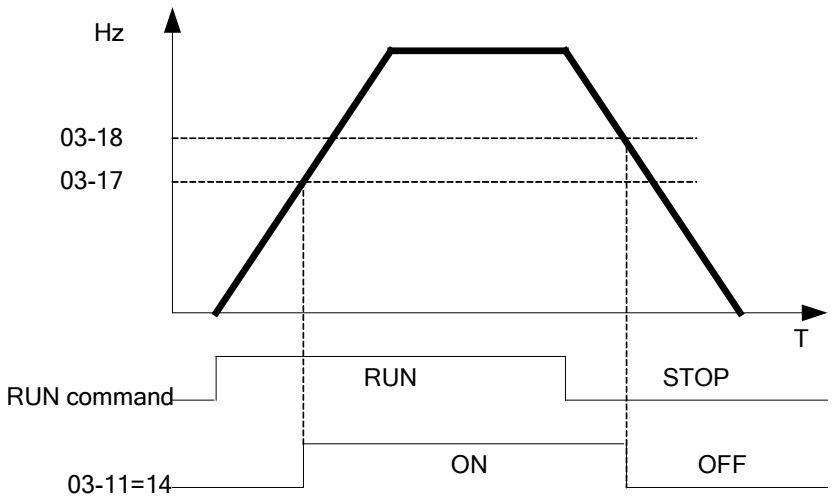

Timing diagram for 03-17 > 03-18 is shown below:

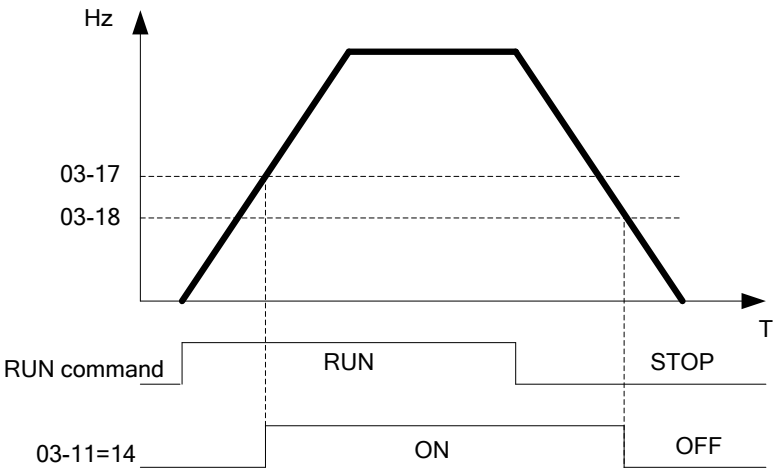

03-19	Relay Output Status type
Range	【0】: A (Normally open) 【1】: B (Normally close)

04 – External analog signal input / output functions

04-00	Analogue Voltage & Current input selections	
	AVI	ACI
Range	【0】: 0 ~ 10V	0 ~ 20mA
	【1】: 0 ~ 10V	4 ~ 20mA
	【2】: 2 ~ 10V	0 ~ 20mA
	【3】: 2 ~ 10V	4 ~ 20mA

- **Analog Input Scaling formulas:-**
  - AVI (0~10V), ACI (0~20mA)

$$\text{AVI}(0\sim10\text{V}):\ F(\text{Hz}) = \frac{V(v)}{10(v)} \times (00-12);$$

$$\text{ACI}(0\sim20\text{mA}):\ F(\text{Hz}) = \frac{I(mA)}{20(mA)} \times (00-12)$$

  - AVI (2~10V), ACI (4～20mA)

$$\text{AVI}(2\sim10\text{V}):\ F(\text{Hz}) = \frac{V-2(v)}{10-2(v)} \times (00-12), V>=2;$$

$$\text{ACI}(4\sim20\text{mA}):\ F(\text{Hz}) = \frac{I-4(mA)}{20-4(mA)} \times (00-12), I>=4;$$

04-01	AVI signal verification Scan Time
Range	【1 ~ 200】ms
04-02	AVI Gain
Range	【0 ~ 1000】%
04-03	AVI Bias
Range	【0 ~ 100】%
04-04	AVI Bias Selection
Range	【0】: Positive 【1】: Negative
04-05	AVI Slope
Range	【0】: Positive 【1】: Negative
04-06	ACI signal verification Scan Time
Range	【1 ~ 200】ms
04-07	ACIGain
Range	【0 ~ 1000】%
04-08	ACI Bias
Range	【0 ~ 100】%
04-09	ACI Bias Selection
Range	【0】: Positive 【1】: Negative
04-10	ACI Slope
Range	【0】: Positive 【1】: Negative

- Set 04-01 and 04-06 for Analog signal verification.

Inverter reads the average values of A/D signal once per (04-01 / 04-06 x 1 ms).
Set scan intervals according to the application and with consideration for signal instability or interference effects on the signal by external sources. Long scan times will result in slower response time.

AVI. Analogue Voltage input scaling examples by adjusting Gain, Bias & Slope parameters (04-02 ~ 04-05).

(1) Positive Bias type (04-04 = 0) and effects of modifying Bias amount by parameter 04-03 and Slope type with parameter 04-05 are shown in Fig 1&2.

Figure 1

	04-02	04-03	04-04	04-05
A	100%	50%	0	0
B	100%	0%	0	0

Figure 2

	04-02	04-03	04-04	04-05
C	100%	50%	0	1
D	100%	0%	0	1

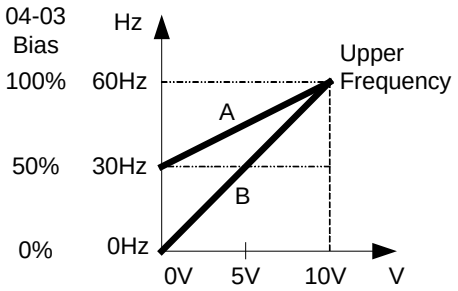

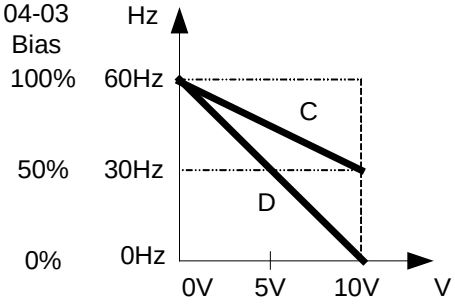

(2) Negative Bias type and effects of modifying Bias amount by parameter 04-03 and Slope type with parameter 04-05 are shown in Fig 3 & 4.

Figure3:

	04-02	04-03	04-04	04-05
E	100%	20%	1	0

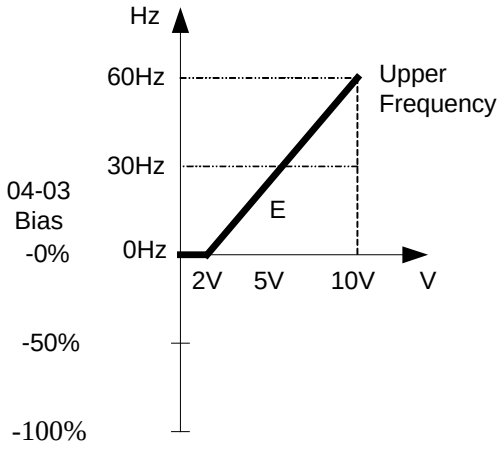

Figure4:

	04-02	04-03	04-04	04-05
F	100%	50%	1	1

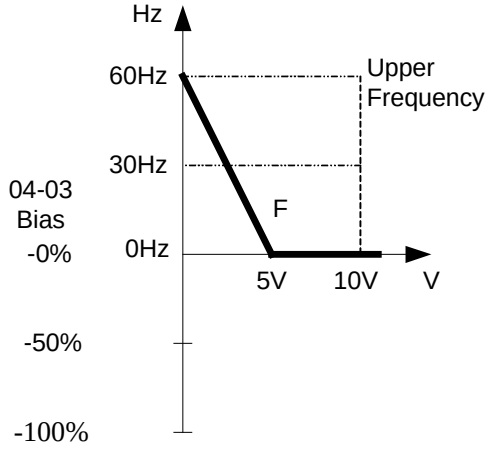

(3) Offset bias set to 0% (04-03) and effect of modifying Analogue Gain (04-02), Bias type (04-04) and slope type(04-05) are shown in shown Fig 5&6.

Figure 5

	04-02	04-03	04-04	04-05
A'	50%	0%	0/1	0
B'	200%	0%	0/1	0

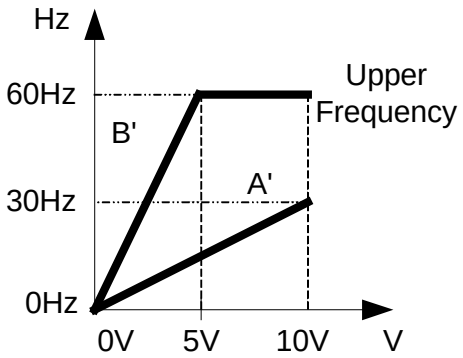

Figure 6

	04-02	04-03	04-04	04-05
C'	50%	0%	0/1	1
D'	200%	0%	0/1	1

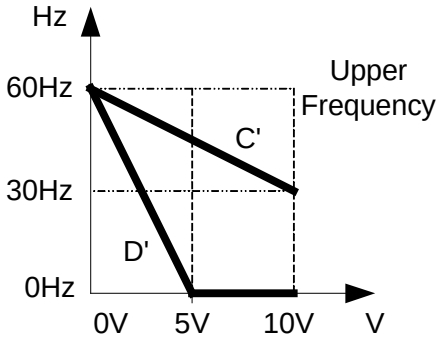

(4) Various other examples of analog input scaling and modification are shown in following figures 7, 8, 9 & 10.

Figure7

	04-02	04-03	04-04	04-05
a	50%	50%	0	0
b	200%	50%	0	0

Figure 8

	04-02	04-03	04-04	04-05
c	50%	50%	0	1
d	200%	50%	0	1

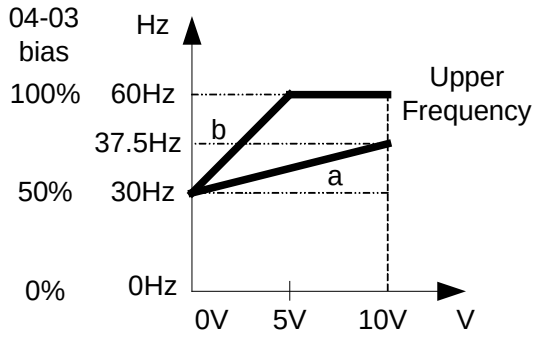

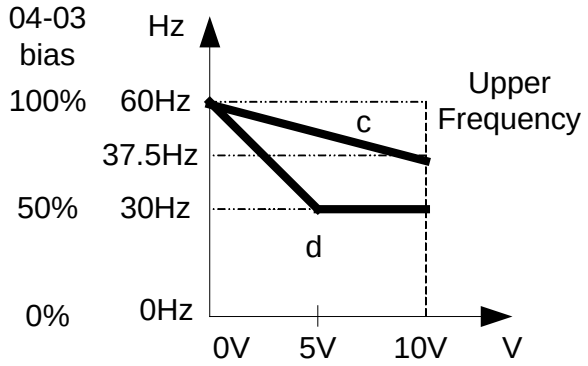

Figure 9

	04-02	04-03	04-04	04-05
e	50%	20%	1	0
f	200%	20%	1	0

Figure 10

	04-02	04-03	04-04	04-05
g	50%	50%	1	1
h	200%	0%	0	1

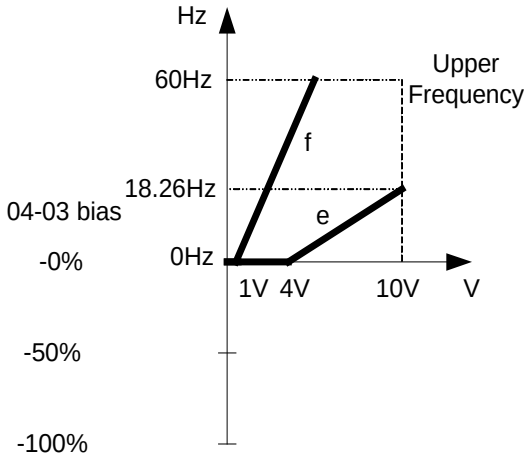

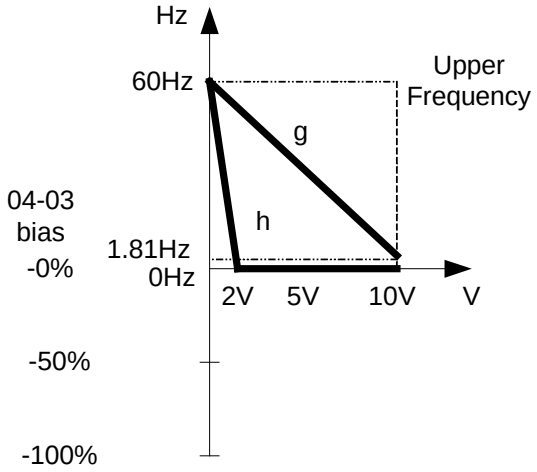

04-11	Analog Output (AO) function selection.
Range	【0】: Output frequency 【1】: Frequency Setting 【2】: Output voltage 【3】: DC Bus Voltage 【4】: Output current

Example: Set 04-11 required according to the following table.

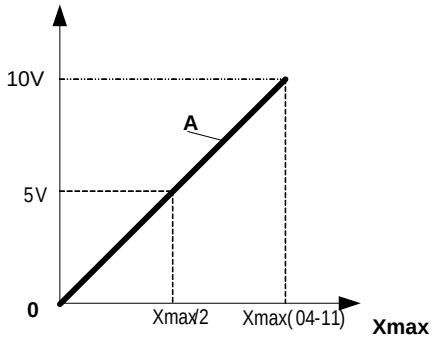

04-11	A	Xmax
【0】	Output frequency	upper frequency limit
【1】	Frequency Setting	upper frequency limit
【2】	Output voltage	Motor Rated Voltage
【3】	DC Bus Voltage	0 ~ 400V
【4】	Output current	2 times rated current of inverter

04-12	AO Gain
Range	【0 ~ 1000】%
04-13	AO Bias
Range	【0 ~ 100】%
04-14	AO Bias Selection
Range	【0】: Positive 【1】: Negative
04-15	AO Slope
Range	【0】: Positive 【1】: Negative

- Select the Analog output type for the multifunction analog output on terminal (TM2) as required by parameter 04-11. Output format is 0-10V DC.
  The output voltage level can be scaled and modified by parameters 04-12 to 04-15 if necessary.

- The modification format will be same as the examples shown previously for Analog Voltage Input (AVI) parameters 4-02 to 4-05.

Note: the max output voltage is 10V due to the hardware of the circuit.
Use external devices that require a maximum of 10V dc signal.

05 – Preset Frequency Selections.

05-00	Preset Speed Control mode Selection
Range	【0】:Common Acc. / Dec. 【1】: Individual Acc. / Dec. for each preset speed 0 - 7.

05-01	Preset Speed 0 (Keypad Freq.)
05-02	Preset Speed 1
05-03	Preset Speed 2
05-04	Preset Speed 3
05-05	Preset Speed 4
05-06	Preset Speed 5
05-07	Preset Speed 6
05-08	Preset Speed 7
Range	【0.00 ~ 650.00】 Hz
05-17	Preset Speed 0 Acceleration time
05-18	Preset Speed 0 Deceleration time
05-19	Preset Speed 1 Acceleration time
05-20	Preset Speed 1 Deceleration time
05-21	Preset Speed 2 Acceleration time
05-22	Preset Speed 2 Deceleration time
05-23	Preset Speed 3 Acceleration time
05-24	Preset Speed 3 Deceleration time
05-25	Preset Speed 4 Acceleration time
05-26	Preset Speed 4 Deceleration time
05-27	Preset Speed 5 Acceleration time

05-28	**Preset Speed 5 Deceleration time**
05-29	**Preset Speed 6 Acceleration time**
05-30	**Preset Speed 6 Deceleration time**
05-31	**Preset Speed 7Acceleration time**
05-32	**Preset Speed 7 Deceleration time**
Range	**【0.1 ~ 3600.0】s**

- When 05-00 =【0】Acc. /Dec. 1 or 2 set by parameters 00-14 / 00-15 or 00-16 / 00-17 apply to all speeds.
- When 05- 00 =【1】Individual Acc. / Dec. apply to each preset speed 0 - 7. Parameters 05-17 to 05-32.
- Formula for calculating acceleration and deceleration time:

$$\text{Actual Acc time}=\frac{\text{Time of Accel1 or 2 x Preset Frequency}}{\text{Max Frequency}}$$

$$\text{Actual Dec time}=\frac{\text{Time of Accel1 or 2 x Preset Frequency}}{\text{Max Frequency}}$$

- Maximum output frequency = parameter 01-02 when programmable V/F is selected by 01-00=【7】.
- Maximum output frequency = 50.00 Hz or 60.00 Hz when preset V/F patterns are selected by. 01-00 ≠【7】.

Example：01-00 ≠ 7 , 01- 02 = 50 Hz, 05-02 = 10 Hz (preset speed1),
05-19 = 5 s (Accel time), 05-20 = 20 s (Decel time)

$$\text{Preset speed 1 Actual Accel time}=\frac{(05\text{-}19)\text{x}10(\text{Hz})}{01\text{-}02}=1(\text{s})$$

$$\text{Preset speed 1 Actual Deccel time}=\frac{(05\text{-}20)\text{x}10(\text{Hz})}{01\text{-}02}=4(\text{s})$$

- **Multi speed run/stop cycles with Individual Acc. / Dec. times 05-00 =【1】**
- Two modes are shown below:-
- Mode1 = On / Off run command
- Mode2 = Continuous run command

Mode1 Example: 00-02 =【1】(External Run/Stop Control).

00-04 =【1】(Operation Mode：Run/stop-forward/reverse).

I1D: 03-00 =【0】(RUN/STOP);

I2D: 03-01 =【1】(Forward/Reverse);

I3D: 03-02 =【2】(Preset speed 1);

I4D: 03-03 =【3】(Preset speed 2);

I5D: 03-04 =【4】(Preset speed 4);

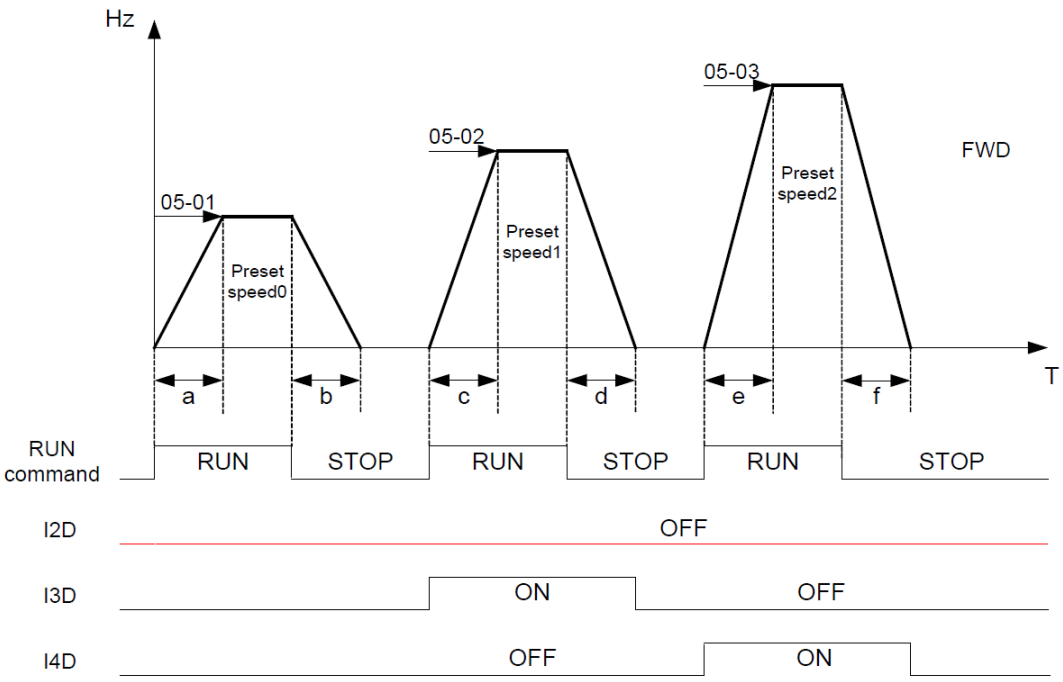

When the run command is On/Off, acceleration and deceleration times for each cycle can be calculated as below:- time unit is in seconds'.

a= $\frac{(05-17)\times(05-01)}{01-02}$, b = $\frac{(05-18)\times(05-01)}{01-02}$,c= $\frac{(05-19)\times(05-02)}{01-02}$,d = $\frac{(05-20)\times(05-02)}{01-02}$ ……

- **Mode2 Example.** Continuous run command.
- Set I1D for Continuous Run
- Set I2D For Forward /Revise direction selection
- Set multifunction terminals I3D, I4D & I5D for setting three different preset speeds

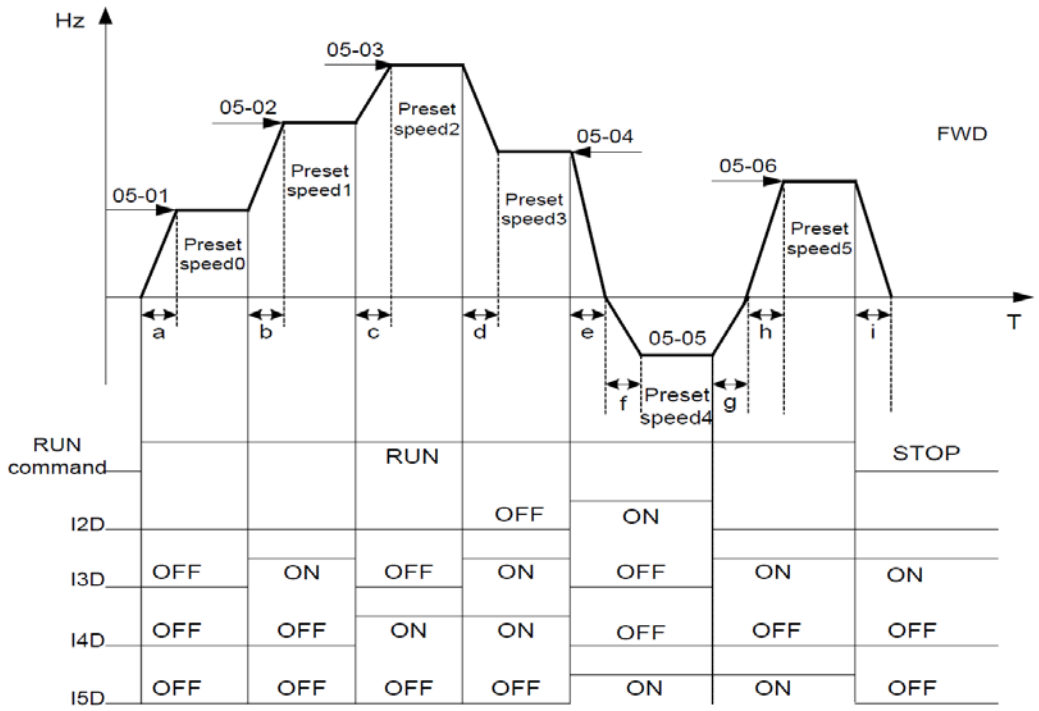

When the run command is continuous, acceleration and deceleration times for each segment can be calculated as below:

Ex: $a=\frac{(05\text{-}17)x(05\text{-}01)}{01\text{-}02}$,$b=\frac{(05\text{-}19)x[(05\text{-}02)\text{-}(05\text{-}01)]}{01\text{-}02}$

$c=\frac{(05\text{-}21)x[(05\text{-}03)\text{-}(05\text{-}02)]}{01\text{-}02}$,$d=\frac{(05\text{-}24)x[(05\text{-}03)\text{-}(05\text{-}04)]}{01\text{-}02}$

$e=\frac{(05\text{-}26)x(05\text{-}05)}{01\text{-}02}$,$f=\frac{(05\text{-}28)x(05\text{-}05)}{01\text{-}02}$,$g=\frac{(05\text{-}27)x(05\text{-}05)}{01\text{-}02}$

$h=\frac{(05\text{-}29)x(05\text{-}05)}{01\text{-}02}$,$i=\frac{(05\text{-}32)x(05\text{-}05)}{01\text{-}02}$ .....Unit(sec)

06 – Auto Run(Auto Sequencer) function

06-00	Auto Run (sequencer) mode selection
Range	【0】: Disabled 【1】: Single cycle (Continues to run from the unfinished step if restarted). 【2】: Periodic cycle. (Continues to run from the unfinished step if restarted). 【3】: Single cycle, then holds the speed of final step to run. (Continues to run from the unfinished step if restarted). 【4】: Single cycle. (Starts a new cycle if restarted). 【5】: Periodic cycle. (Starts a new cycle if restarted). 【6】: Single cycle, then hold the speed of final step to run. (Starts a new cycle if restarted).

Frequency of the step 0 is set by Parameter 05-01 Keypad Frequency.	
06-01	Auto _ Run Mode Frequency Command 1
06-02	Auto _ Run Mode Frequency Command 2
06-03	Auto _ Run Mode Frequency Command 3
06-04	Auto _ Run Mode Frequency Command 4
06-05	Auto _ Run Mode Frequency Command 5
06-06	Auto _ Run Mode Frequency Command 6
06-07	Auto _ Run Mode Frequency Command 7
Range	【0.00 ~ 650.00】Hz

06-16	Auto_ Run Mode Running Time Setting 0
06-17	Auto_ Run Mode Running Time Setting 1
06-18	Auto_ Run Mode Running Time Setting 2
06-19	Auto_ Run Mode Running Time Setting 3
06-20	Auto_ Run Mode Running Time Setting 4
06-21	Auto_ Run Mode Running Time Setting 5
06-22	Auto_ Run Mode Running Time Setting 6
06-23	Auto_ Run Mode Running Time Setting 7
Range	【0.00 ~ 3600.0】Sec

06-32	Auto_ Run Mode Running Direction 0
06-33	Auto_ Run Mode Running Direction 1

06-34	**Auto_ Run Mode Running Direction 2**
06-35	**Auto_ Run Mode Running Direction 3**
06-36	**Auto_ Run Mode Running Direction 4**
06-37	**Auto_ Run Mode Running Direction 5**
06-38	**Auto_ Run Mode Running Direction 6**
06-39	**Auto_ Run Mode Running Direction 7**
Range	**【0】: STOP 【1】: Forward 【2】: Reverse**

- Auto Run sequencer mode has to be enabled by using one of the multifunctional inputs I1D to I5D and setting the relevant parameter 03-00 to 03-04 to selection【18】.
- Various Auto Run (sequencer) modes can be selected by parameter (06-00) as listed above.
- 7 Auto Run (sequencer) modes can be selected by parameters (06-01 ~ 06-39)
- Auto Run frequency commands1 to 7 are set with Parameters (06-01 ~ 06-07),
- Sequence run times are set with parameters (06-17 ~ 06-23)
- FWD/REV Direction for each sequence can be set with parameters (06-33 ~ 06-39).
- Auto sequence 0, frequency is set from keypad by parameter 05-01, sequence run time and direction are set by parameters 06-16 and 06-32.

Auto RUN (Auto Sequencer) examples are shown in the following pages:-

Example 1. Single Cycle (06-00 = 1, 4)

The inverter will run for a single full cycle based on the specified number of sequences, then it will stop. In this example 4 sequences are set, three in forward direction and one in Reverse.

Auto Run Mode. 06-00 =【1】or【4】,

Frequency 05-01 =【15】Hz, 06-01 =【30】Hz, 06-02 =【50】Hz, 06-03 =【20】Hz

Sequence Run Time 06-16 =【20】s, 06-17 =【25】s, 06-18 =【30】s, 06-19 =【40】s,

Direction 06-32 =【1】FWD, 06-33 =【1】FWD, 06-34 =【1】(FWD), 06-35 =【2】(REV)

Unused Sequence Parameters 06-04 ~ 06-07 =【0】Hz, 06-20 ~ 06-23 =【0】s,

06-36 ~ 06-39 =【0】

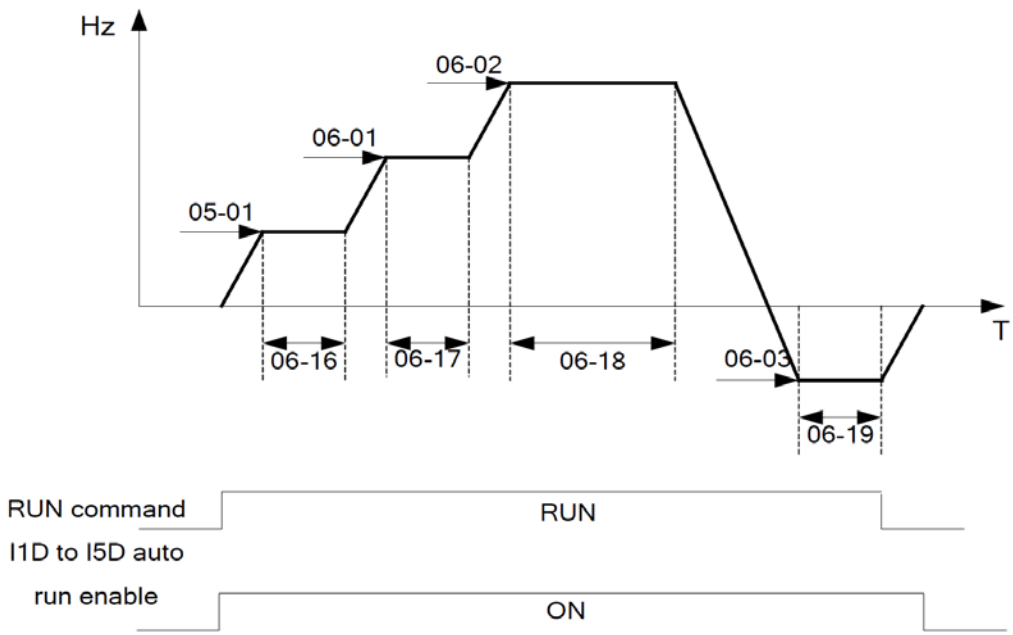

Example 2, Periodic cycle Run:

Mode: 06-00 =【2】or【5】

The inverter will repeat the same cycle periodically.
All other Parameters are set same as in example 1 shown above.

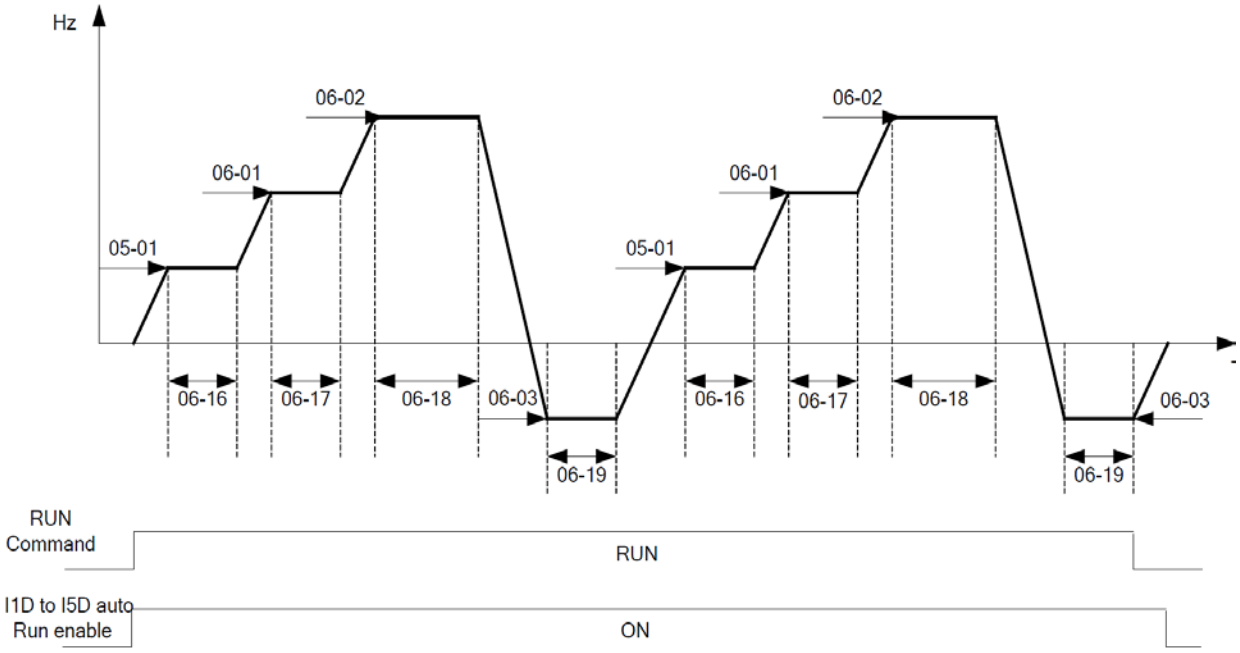

Example 3, Auto Run Mode for Single Cycle 06-00 =【3 or 6】

The speed of final step will be held to run.

Auto Run Mode. 06-00 =【3】or【6】

Frequency 05-01 =【15】Hz, 06-01 =【30】Hz, 06-02 =【50】Hz, 06-07 =【20】Hz,

Sequence Run Time 06-16 =【20】s, 06-17 =【25】s, 06-18 =【30】s, 06-23 =【40】s,

Direction 06-32 =【1】FWD, 06-33=【1】FWD, 06-34 =【1】FWD, 06-39 =【1】FWD

Unused Sequence Parameters 06-03 ~ 06- 06 =【0】Hz, 06-19 ~ 06-22 =【0】s, 06-35 ~ 06-38 =【0】

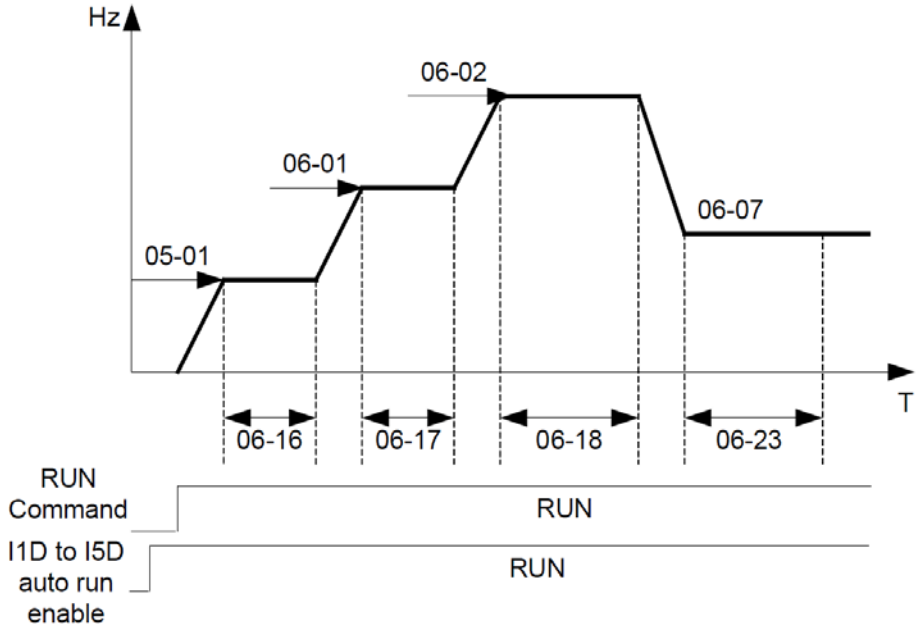

Example 4 & 5:

Auto Run Mode 06-00 =【1 ~ 3】. After a restart the inverter continues to run from the unfinished step.

Auto Run Mode 06-00 =【4 ~ 6】. After a restart the inverter will begin a new cycle.

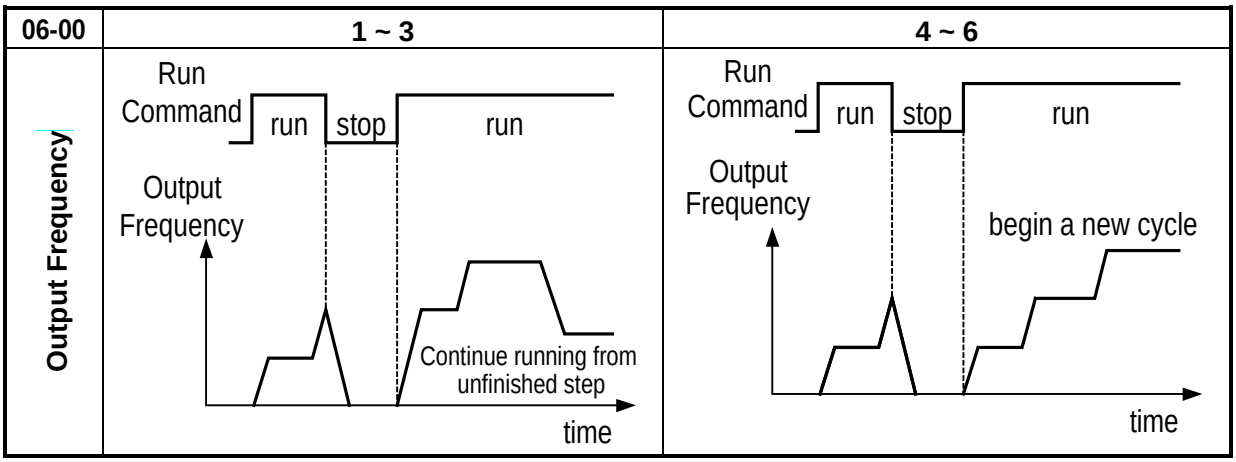

- ACC/DEC time in Auto run mode will be according to the setting of 00-14 / 00-15 or 00-16 / 00-17.
- For Auto sequence 0.The run frequency will be according to keypad frequency set by parameter 05-01. Parameters 06-16 and 06-32 are used to set the sequence Run time and Run direction.

07 – Start/Stop command setup	
07-00	**Momentary power loss and restart**
Range	**【0】: Momentary Power Loss and Restart disable** **【1】: Momentary power loss and restart enable**

- If the input power supply due to sudden increase in supply demand by other equipment results in voltage drops below the under voltage level, the inverter will stop its output at once.
- When 07-00 =【0】, on power loss, the inverter will not start.
- When 07-00 =【1】, after a momentary power loss, inverter will restart with the same frequency before power loss, and there is no limitation on number of restarts.
- On power loss, as long as the inverter CPU power is not completely lost, the momentary power loss restart will be effective, restart will be according to setting of parameters 00-02 & 07-04 and status of External run switch.

Caution: After any power loss if the Run mode is set to External by parameter 00-02 = 1 and if Direct start on power up is also selected by parameter 07-04 = 0, please note that the inverter will run on resumption of power.

To ensure safety of operators and to avoid any damages to the machinery, all necessary safety measure must be considered, including disconnection of power to the inverter.

07-01	**Auto Restart Delay Time**
Range	**【0.0 ~ 800.0】Sec**
07-02	**Number of Auto Restart Attempts**
Range	**【0 ~ 10】**

- 07-02 =【0】: The inverter will not auto restart after trips due to fault.
- 07-02 >【0】, 07- 01 =【0】, after a trip due to fault the inverter will run with the same frequency before power loss, and restarts after an internal delay of 0.5 seconds.

- 07-02 >【0】, 07-01 >【0】, after a fault trip the inverter will run with the same frequency before power loss, and restart with a delay according the preset in parameter 07-01.
- ***Note:- Auto restart after a fault will not work during DC injection braking or decelerating to stop***

07-03	Reset Mode Setting
Range	**【0】: Enable Reset Only when Run Command is Off** **【1】: Enable Reset when Run Command is On or Off**

- 07-03 = 0: once the inverter is detected a fault, please turn Run switch Off and then On again to perform reset, otherwise restarting will not be possible.

07-04	Direct Running on Power Up
Range	**【0】: Enable Direct running after power up** **【1】: Disable Direct running after power up**
07-05	**Delay-ON Timer (Sec.)**
Range	**【1 ~ 300.0】Sec**

- When direct run on power up is selected by 07-04 = 0 and the inverter is set to external run by (00-02 / 00-03 = 1), if the run switch is ON as power is applied, the inverter will auto start.
  It is recommend that the power is turned off and the run switch is also off to avoid possibility of injury to operators and damage to machines as the power is reapplied.

Note: If this mode is required all safety measures must be considered including warning labels.

- When direct run on power up is disabled by 07-04 = 1and if the inverter is set to external run by (00-02 / 00-03 = 1), if the run switch is ON as power is applied, the inverter will not auto start and the display will flash with STP1. It will be necessary to turn OFF the run switch and then ON again to start normally.

07-06	DC Injection Brake Start Frequency (Hz)
Range	**【0.10 ~ 10.00】Hz**
07-07	**DC Injection Brake Level (%)**
Range	**【0 ~ 20】%**
07-08	**DC Injection Brake Time (Sec)**
Range	**【0.0 ~ 25.5】Sec**

- 07-08 / 07-06 set the DC injection brake duration and the brake start frequency as shown below.

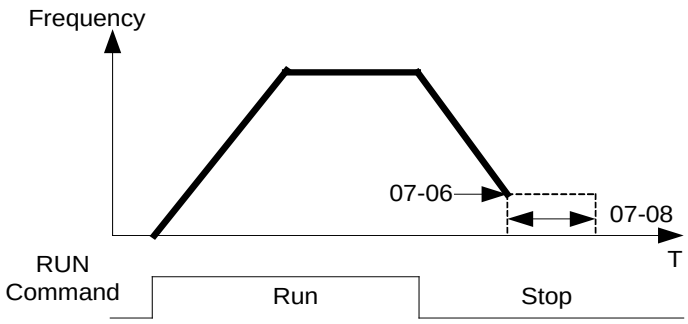

07-09	Stopping Method
Range	【0】: Deceleration to stop. 【1】: Coast to stop.

- 07-09 = 【0】: after receiving stop command, the motor will decelerate to stop according to setting of 00-15, deceleration time 1.
- 07-09 = 【1】: after receiving stop command, the motor will free-run (Coast) to stop.

08 – Protection function group

08-00	Trip Prevention Selection
Range	【xxxx0】: Enable Trip Prevention During Acceleration 【xxxx1】: Disable Trip Prevention During Acceleration 【xxx0x】: Enable Trip Prevention During Deceleration 【xxx1x】: Disable Trip Prevention During Deceleration 【xx0xx】: Enable Trip Prevention in Run Mode 【xx1xx】: Disable Trip Prevention in Run Mode 【x0xxx】: Enable over voltage Prevention in Run Mode 【x1xxx】: Disable over voltage Prevention in Run Mode

08-01	Trip Prevention Level During Acceleration
Range	【50 ~ 200】%

- Trip prevention adjustment level during acceleration to prevent over current (OC-A) trips.
- If trip prevention during acceleration is enabled and an over current occurs due to the load, then the acceleration is interrupted until the over current level is dropped below the setting in 08-01 then the acceleration is resumed.

08-02	Trip Prevention Level During Deceleration
Range	【50 ~ 200】%

- Trip prevention adjustment level during deceleration to prevent over Voltage (OV-C) trips.
- If trip prevention during deceleration is enabled and an over voltage occurs during stopping due to the load, then the deceleration is interrupted until the over voltage level is dropped below the setting in 08-02 then the deceleration is resumed.

08-03	Trip Prevention Level during continuous Run Mode
Range	【50 ~ 200】%

- Trip prevention adjustment level during continuous Run to prevent over current (OC-C) trips.
- If trip prevention during continuous Run is enabled and an over current occurs due the load such as a sudden transient load, then the output frequency is reduced by decelerating to a lower speed until the over current level is dropped below the preset in 08-03, then the output frequency accelerates back to the normal running frequency.

08-04	Over voltage Prevention Level during Run Mode
Range	【350 ~ 390】VDC

- Over voltage prevention level can be set by parameter 08-04 when necessary.
  When the DC bus voltage is higher than the level set in 08-04, the over voltage fault will occur.

08-05	Electronic Motor Overload Protection Operation Mod (OL1)
Range	【0】: Disable Electronic Motor Overload Protection 【1】: Enable Electronic Motor Overload Protection

08-06	Operation After Overload Protection is Activated
Range	【0】: Coast-to-Stop After Overload Protection is Activated 【1】: Drive Will Not Trip when Overload Protection is Activated (OL1)

- 08-06 = 【0】: On overload condition the inverter coast to stop as the thermal relay detects the overload and the display will flash OL1.To reset press the 'Reset' key or use an external reset to continue to run.
- 08-06 = 【1】: On overload condition the inverter continues to run, display flash with OL1, until the current falls below the overload level.

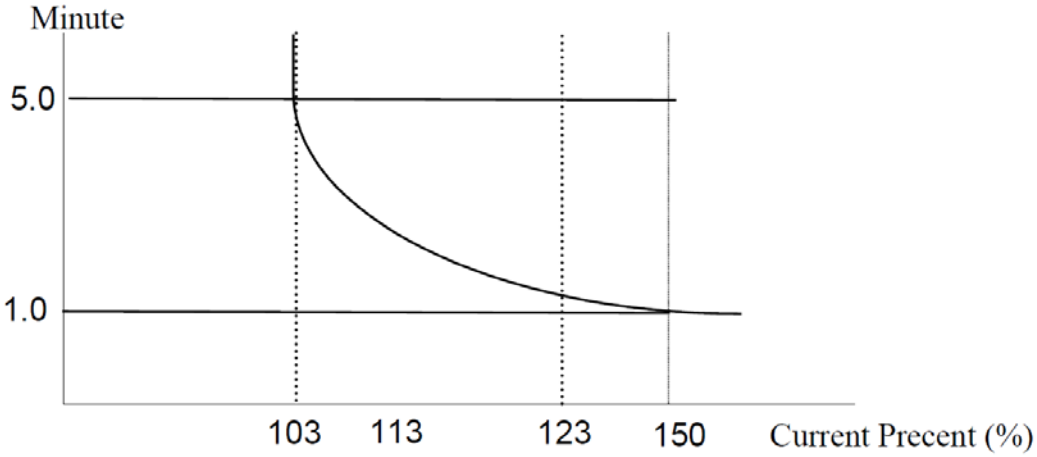

08-07	OH Over Heat Protection
Range	【0】: Auto (Depends on heat sink temp.) 【1】: Operate while in RUN mode 【2】: Always Run 【3】: Disabled

- **08-07 =【0】:** Cooling fan runs as the inverter detects temperature rise.
- **08-07 =【1】:** Cooling fan runs while the inverter is running.
- **08-07 =【2】:** Cooling fan runs continuously.
- **08-07 =【3】:** Cooling fan is disabled**.**

08-08	AVR function
Range	【0】: AVR function enable 【1】: AVR function disable 【2】: AVR function disable for stop 【3】: AVR function disable for Deceleration 【4】: AVR function disabled for stop & Deceleration from one speed to another speed. 【5】: when VDC > 360V, AVR function is disabled for stop and Deceleration

- Automatic voltage regulator function provides a level of output voltage stability when there is input voltage instability. So when 08-08 = 0, Input voltage fluctuations will not have an effect to the output voltage.
- 08-08 = 1, Input voltage fluctuations will cause fluctuations on output voltage.
- 08-08 = 2, AVR is disabled during stopping to avoid an increase in stopping time.
- 08-08 = 3, AVR is disabled only during deceleration from one speed to another speed. This will avoid longer than required deceleration time.

08-09	Input phase loss protection
Range	【0】: Disabled 【1】: Enabled

When 08-09 =【1】: Phase loss warning message PF is displayed.

09 – Communication function group

09-00	Assigned Communication Station Number
Range	【1 ~ 32】

- 09-00 sets the communication station number when there is more that one unit on the communication network. Up to 32 Slave units can be controlled from one master controller such as a PLC.

09-01	RTU code /ASCII code Selection
Range	【0】: RTU 【1】: ASCII
09-02	**Baud Rate Setting (bps)**
Range	【0】: 4800 【1】: 9600 【2】: 19200 【3】: 38400
09-03	**Stop Bit Selection**
Range	【0】: 1 stop bit 【1】: 2 stop bit
09-04	**Parity Selection**
Range	【0】: no parity 【1】: even parity 【2】: odd parity
09-05	**Data Format Selection**
Range	【0】: 8 bit data 【1】: 7 bit data

- Set 09-01 ~ 09-05 to configure communication format before starting communication.

09-06	Communication time-out detection time
Range	【0.0 ~ 25.5】Sec
09-07	**Communication time-out operation selection**
Range	【0】: Stop in deceleration time 1 and show COT after communication timeout 【1】: Stop in free run mode and show COT after communication timeout 【2】: Stop in deceleration time 2 and show COT after communication timeout 【3】: Keep running and show COT after Communication timeout

- Time-out detection time: 00.0 ~ 25.5 seconds; setting 00.0 seconds: disables time-out function.

09-08	Err6 fault tolerance times
Range	【1 ~ 20】

- When communication error time ≥ 09-08 setting，keypad display shows ERR6.

09-09	Drive Transmit Wait Time
Range	【5 ~ 65】ms

➢ This parameter is used to set the converter to receive data from the sending date to the beginning of the time.

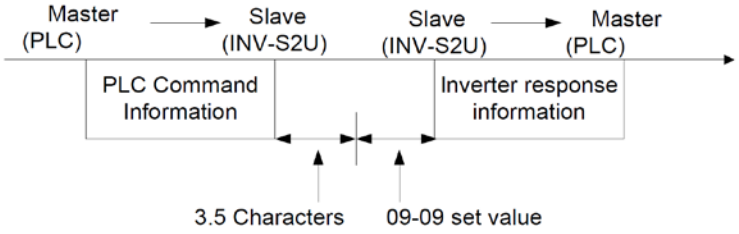

10 – PID function Setup

PID block diagram

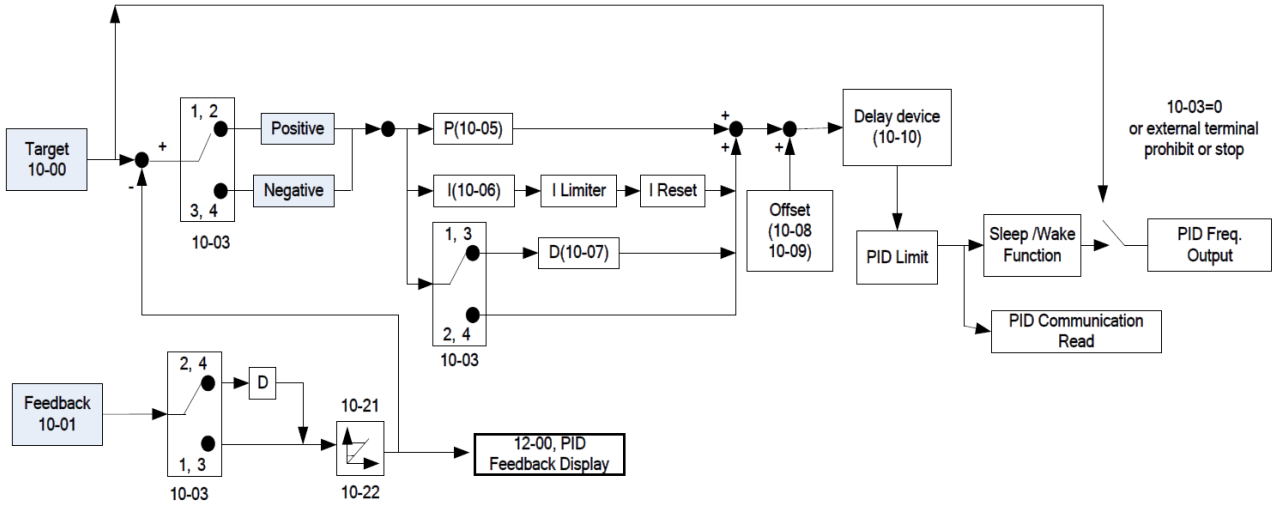

10-00	PID target value selection
Range	【0】: Potentiometer on Keypad 【1】: External AVI Analog Signal Input 【2】: External ACI Analog Signal Input 【3】: Target Frequency set by Communication method. 【4】: Set from keypad by parameter 10-02.

➢ 10-00: selections are only effective when frequency source selection is set to PID by parameters 00-05 / 00-06 = 6.

10-01	PID feedback value selection
Range	【0】: Potentiometer on Keypad 【1】: External AVI Analog Signal Input 【2】: External ACI Analog Signal Input 【3】: Communication setting Frequency

➢ Note: 10-00 and 10-01 can not be set to the same value!

10-02	PID keypad input
Range	【0.0 ~ 100.0】%

10-03	PID operation selection	
Range	【0】: PID Function disabled	
	【1】: FWD Characteristic.	Deviation is D-controlled
	【2】: FWD Characteristic.	Feedback is D-controlled
	【3】: REV Characteristic.	Deviation is D-controlled
	【4】: REV Characteristic.	Feedback is D-controlled

- 10-03 =【1】.

Deviation (target - detected value) is derivative controlled in unit time set in parameter 10-07.

- 10-03 =【2】

Feedback (detected value) is derivative controlled in unit time set in parameter 10-07.

- 10-03 =【3】

Deviation (target value - detected value) is derivative controlled in unit time set in parameter 10-07. If the deviation is positive, the output frequency decreases, vice versa.

- 10-03 =【4】

Feed back (detected value) is derivative controlled in unit time set in parameter 10-07.
If the deviation is positive, the output frequency decreases, vice versa.
Note:
For 10-03 = 1 or 2, If the deviation is positive, the output frequency increases and, vice versa.
For 10-03 = 3 or 4, If the deviation is positive, the output frequency decreases, vice versa.

10-04	Feedback Gain coefficient
Range	【0.00 ~ 10.00】

- 10-04 is the calibration gain. Deviation = set point – (feedback signal × 10-04)

10-05	Proportional Gain
Range	【0.0 ~ 10.0】

- 10-05: Proportion gain for P control.

10-06	Integral Time
Range	【0.0 ~ 100.0】s

- 10-06: Integration time for I control

10-07	Derivative Time
Range	【0.00 ~ 10.00】s

- 10-07: Differential time for D control

10-08	PID Offset
Range	【0】: Positive Direction 【1】: Negative Direction
10-09	**PID Offset Adjust**
Range	【0 ~ 109】%

- 10-08 /10-09: Calculated PID output is offset by 10-09 (the polarity of offset is according to10-08)

10-10	PID Output Lag Filter Time
Range	【0.0 ~ 2.5】s

- 10-10: Update time for output frequency.

10-11	Feedback Loss Detection Mode
Range	【0】: Disable 【1】: Enable – Drive Continues to Operate After Feedback Loss 【2】: Enable – Drive “STOPS” After Feedback Loss

- **10-11= 【1】: On feed back loss** detection, continue running, and display ‘PDER’;
- **10-11= 【2】: On feed back loss** detection, stop, and display ‘PDER’。

10-12	Feedback Loss Detection Level
Range	【0 ~ 100】

- 10-12 is the level for signal loss. Error = (Set point – Feedback value). When the error is larger than the loss level setting, the feedback signal is considered lost.

10-13	Feedback Loss Detection Delay Time
Range	【0.0 ~ 25.5】s

- 10-13: The minimum time delay before feedback signal loss is determined.

10-14	Integration Limit Value
Range	【0 ~ 109】%

- 10-14: the Limiter to prevent the PID from saturating.

10-15	Integration Value Resets to Zero when Feedback Signal Equals the target Value
Range	【0】: Disabled 【1】: After 1 Sec 【30】: After 30 Sec (Range:- 1 ~ 30 Sec)

- 10-15 = 0. As PID feedback value reaches the set point, the integral value will not be reset.
- 10-15 = 1 ~ 30. As PID feedback value reaches the set point, reset to 0 in 1 ~ 30 seconds and inverter stops. The inverter will run again when the feedback value differs from the set point value.

10-16	Allowable Integration Error Margin (Unit) (1 Unit = 1/8192)
Range	【0 ~ 100】%

- 10-16 = 0 ~ 100% unit value: Restart the tolerance after the integrator reset to 0.

10-17	PID Sleep Frequency Level
Range	【0.00 ~ 650.00】Hz
10-18	PID Sleep Function Delay Time
Range	【0.0 ~ 25.5】s
10-19	PID Wake up frequency Level
Range	【0.00 ~ 650.00】Hz
10-20	PID Wake up function Delay Time
Range	【0.0 ~ 25.5】s

- When PID output frequency is less than the sleep threshold frequency and exceeds the time of sleep delay, the inverter will decelerate to 0 and enters PID sleep mode.
- When PID output frequency is larger than the Wake up threshold frequency inverter will enter the PID mode again as shown in the timing diagram below.

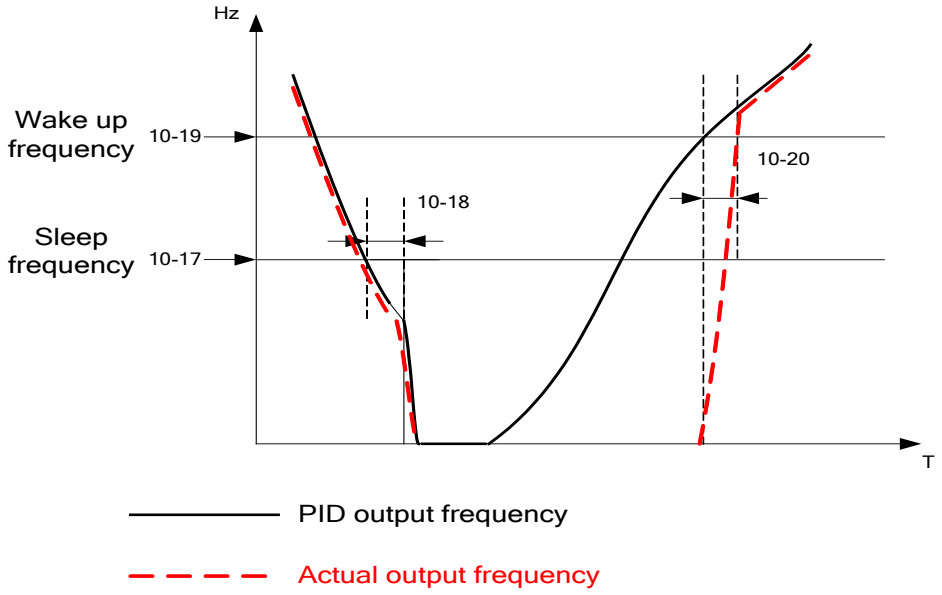
Hz
Wake up frequency
10-19
Sleep frequency
10-17
10-18
10-20
T
PID output frequency
Actual output frequency

10-21	Max PID Feedback Level.
Range	【0 ~ 999】
10-22	Min PID Feedback Level.
Range	【0 ~ 999】

- Example: If 10-21 = 100 and 10-22 = 50 and the unit for the range from 0 to 999 will be defined with the parameters setting of 12-02, actual feedback value variation range, will be scaled to 50 and 100 only for display, as Shown below.

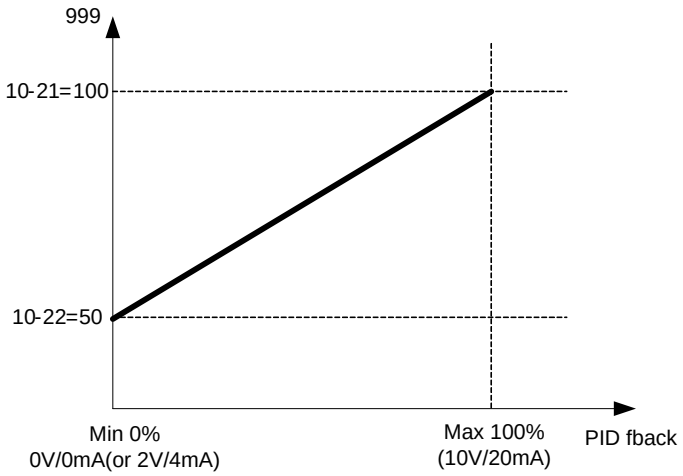

11 – Performance control functions

11-00	Prevention of Reverse operation
Range	【0】: Reverse command is enabled 【1】: Reverse command is disabled

- 11-00 = 1, the reverse command is **disabled**.

11-01	Carrier Frequency
Range	【1 ~ 16】KHz

11-02	Carrier mode selection
Range	【0】: Carrier mode0 3-phase PWM modulation 【1】: Carrier mode1 2-phase PWM modulation 【2】: Carrier mode2 2-phase randomized PWM modulation

- Mode 0: 3-phase PWM Modulation Three Output transistors on at the same time (Full Duty).
- Mode 1: 2-phase PWM Modulation Two output transistors on at the same time (2 / 3 Duty).
- Mode 2: Random PWM Modulation This modulation method will use 3-phase PWM and 2-phase PWM modulation in a random mode.

Modes	Name	IGBT Duty	Heat Losses	Torque Performance	Waveform Distortion	Motor Noise
0	3-Phase PWM	100%	High	High	Low	Low
1	2-Phase PWM	66.6%	Low	Low	High	High
2	Randomized PWM	Between mode0 & mode1	Mid	Mid	Mid	Mid

11-03	Carrier Frequency Auto Reduction due to temperature rise
Range	【0】: Disable 【1】: Enable

- When inverter (heat sink) temperature rises above 80°C the Carrier Frequency is reduced by 4K.
- When the temperature falls below less than 70°C, Carrier Frequency is reset to default.
- Temperature can be displayed by setting parameter 12-00 = 04000.

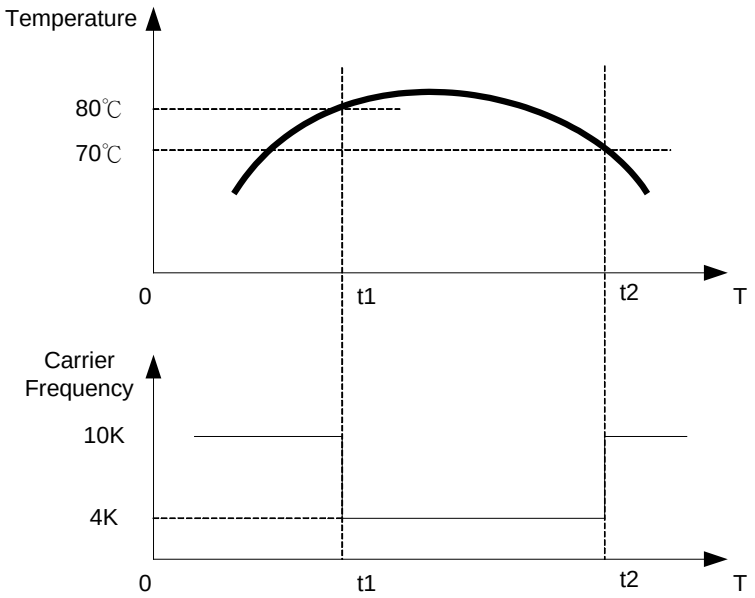

11-04	**S-Curve Acc 1**
11-05	**S-Curve Acc 2**
11-06	**S-Curve Dec 3**
11-07	**S-Curve Dec 4**
Range	**【0.0 ~ 4.0】s**

- Use S Curve parameters where a smooth acceleration or deceleration action is required, this will prevent possible damage to driven machines by sudden acceleration/deceleration.

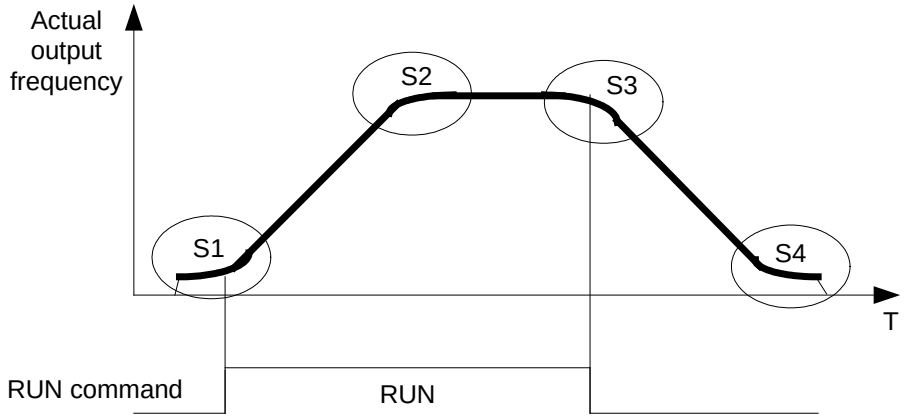

Note:

- Regardless of the stall prevention period, actual acceleration and deceleration time = preset acceleration / deceleration time + S curve time.
- Please set the required individual S curve times in the parameters (11-04 ~ 11-07).
- When S curve time (11-04 ~ 11-07) is set as 0, the S curve function is disabled.
- The calculation of S curve time is based on the Maximum output frequency of motor (01-02), Please refer to the parameters (00-14 / 00-15 / 00-16 / 00-17).

11-08	**Skip frequency 1**
11-09	**Skip frequency 2**
11-10	**Skip frequency 3**
Range	**【0.00 ~ 650.00】Hz**
11-11	**Skip frequency range (± frequency band)**
Range	**【0.00 ~ 30.00】Hz**

Skip frequency parameters can be used to avoid mechanical resonance in certain applications.
Example: 11-08 = 10.00 (Hz); 11-09 = 20.00 (Hz); 11-10 = 30.00 (Hz); 11-11 = 2.00 (Hz).

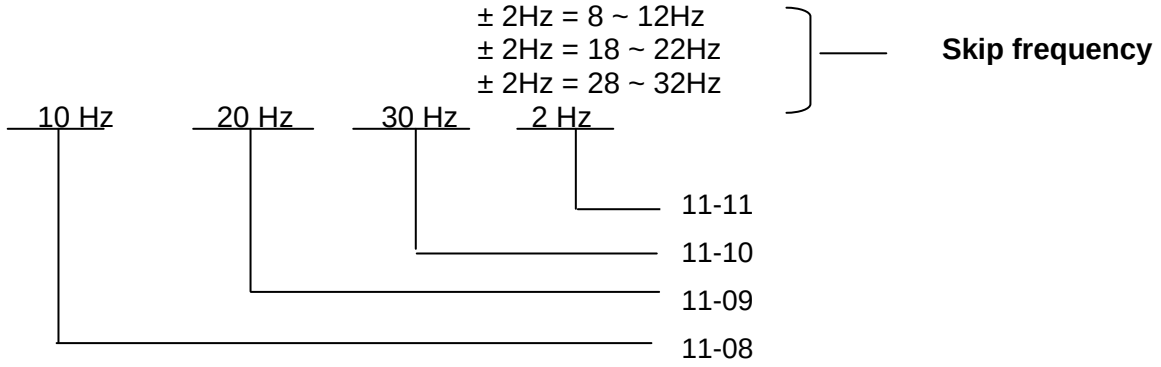

12 – Monitor function group

12-00	Display Mode
Range	0 0 0 0 0 MSD LSD 00000 ~ 77777 Each digit can be set from 0 to 7 as listed below. 【0】: Disable display 【1】: Output Current 【2】: Output Voltage 【3】: DC voltage 【4】: Temperature 【5】: PID feedback 【6】: AVI 【7】: ACI

- MSD = Most significant digit. LSD = Least significant digit.
- Note: MSD of parameter 12-00 sets the power on display, other digits set user selected displays.

12-01	PID Feedback Display Mode
Range	【0】: Displayed in Integer (xxx) 【1】: Displayed with One Decimal Place (xx.x) 【2】: Displayed with Two Decimal Places (x.xx)
12-02	**PID Feedback Display Unit Setting**
Range	【0】: xxx-- 【1】: xxxpb (pressure) 【2】: xxxfl (flow)

12-03	Custom Units (Line Speed) Display Mode
Range	【0 ~ 65535】rpm

- Set motor rated RPM in this parameter if required then the display will show this value when inverter output frequency reaches the motor name plate frequency 50 Hz or 60 Hz as appropriate.
- The line speed display is linearly proportional to the output frequency 0 to 50 Hz or 0-60 Hz as appropriate. Motor synchronous speed = 120 x Rated frequency/Number of poles.

12-04	Custom Units (Line Speed) Display Mode
Range	【0】: Drive Output Frequency is Displayed 【1】: Line Speed is Displayed in Integer (xxxxx) 【2】: Line Speed is Displayed with One Decimal Place (xxxx.x) 【3】: Line Speed is Displayed with Two Decimal Places (xxx.xx) 【4】: Line Speed is Displayed with Three Decimal Places (xx.xxx)

- **12-04 ≠ 0**, line speed is displayed while the inverter is running or stopped.

12-05	Input and output terminal status display
Range	Read only (Panel read only)

- When any of I1D ~ I5D is turned ON, corresponding segments on the digital display digits will be on.
- When relay output RY1 is ON, the corresponding digit will be on as shown below.
- When no Digital input and no relay output, they will show - - - - - .

Example 1: The following figure shows 12-05 display status,
when I1D, I3D, I5D Inputs are ON and I2D, I4D and RY1 are OFF.

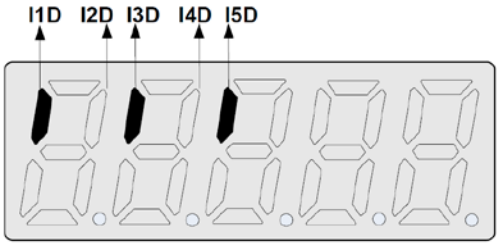

Example 2: The following figure shows 12-05 display status
when I2D, I3D, I4D inputs are ON and I1D, I5D are OFF but RY1 is ON.

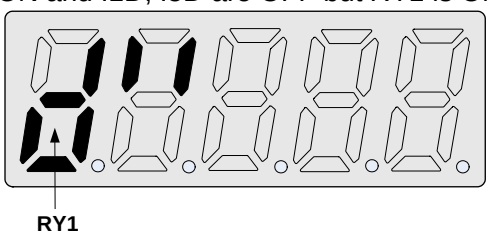

13 Inspection & Maintenance functions

13-00	Drive Horsepower Code
Range	----

Inverter Model:	13-00 show	Inverter Model:	13-00 show
S2U230S-02F	02	S2U230S-11F	11
S2U230S-03F	03	S2U230S-13F	13
S2U230S-07F	07		

13-01	Software Version
Range	----

13-02	Fault Log Display (Last 3 faults)
Range	----

- Last three faults are stored in a stack and whenever there is a new fault the previous faults are pushed down the stack. So the fault stored in 2.xxx will be transferred to 3.xxx, and the one in 1.xxx to 2.xxx. The recent fault will be stored in the empty register 1.xxx.
- Use Up▲and Down▼ keys to scroll between the fault registers.
- Pressing reset key when parameter 13-02 is displayed then all three fault registers will be cleared and the display for each register will change to 1. ---, 2. ---, 3. ---.
- E.g. fault log content is ‘1.OC-C’; this indicates the latest fault is OC-C, etc.

13-03	Accumulated Inverter Operation Time 1
Range	【0 ~ 23】Hours
13-04	Accumulated Inverter Operation Time 2
Range	【0 ~ 65535】Days
13-05	Accumulated Inverter Operation Time Mode
Range	【0】: Power on time 【1】: Operation time

- When the operation time recorded in accumulator 1 (Parameter 13-03) reaches 24 hours
- The recorded value in accumulator 2 parameter 13-04 changes to 1 day and the value in accumulator 1 is reset to 0000.

13-06	Parameter lock
Range	【0】: Enable all Functions 【1】: Preset speeds 05-01 ~ 05-08 cannot be changed 【2】: All Functions cannot be changed Except for preset speeds set in 05-01 ~ 05-08 【3】: Disable All Function Except 13-06

- When the 13-07 =00000 (not set a password), you can adjust the parameters 05-01 ~ 05-08 from 13-06.

13-07	Parameter Lock Key Code
Range	【00000 ~ 65535】

- When a parameter lock key number is entered in parameter 13-07. For any parameter modification the key number has to be entered.
  See following Parameter lock key setting example:-

- Setting Parameter lock key number example:

Step1:

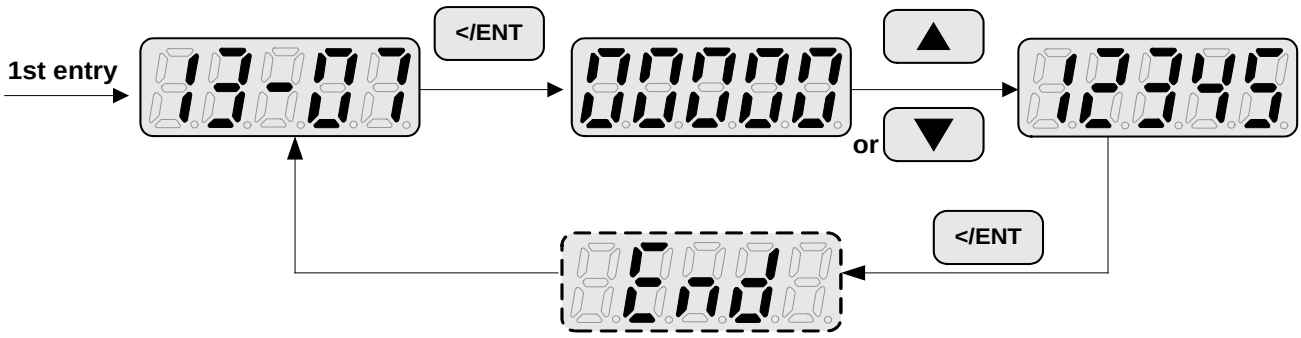

Step2:

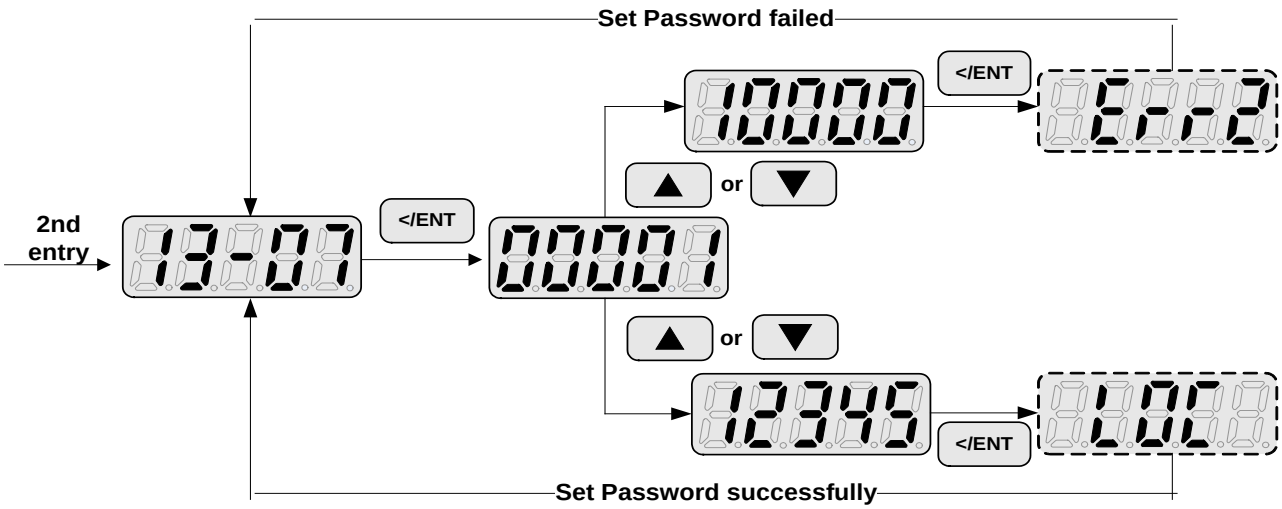

Key code (password) unlock

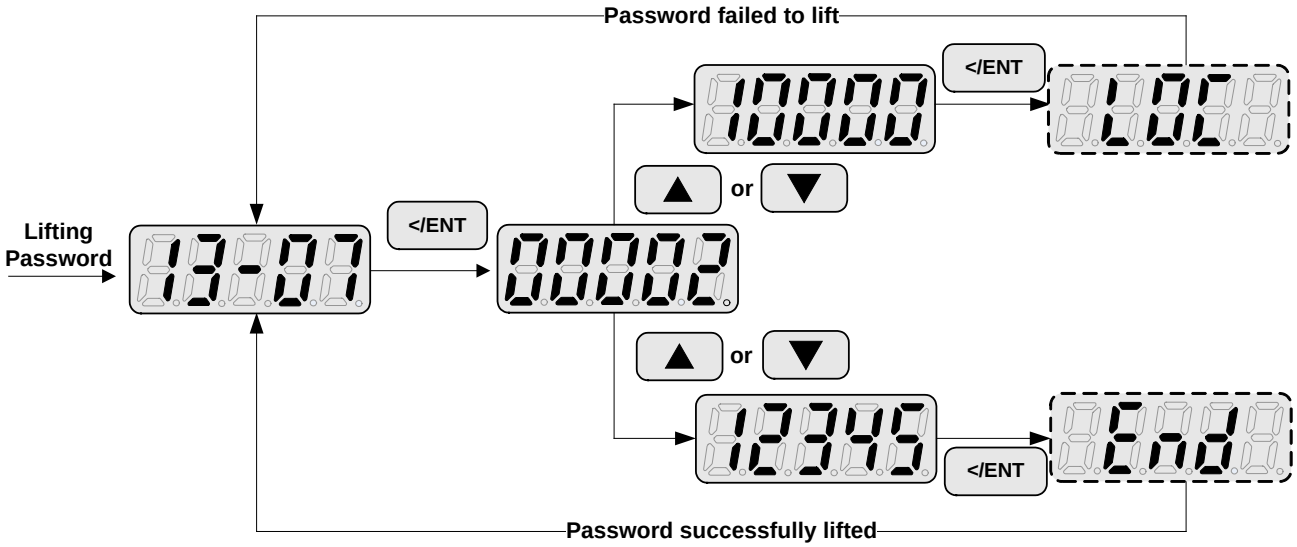

13-08	Reset Drive to Factory Settings
Range	【1150】: Reset to the 50Hz factory setting 【1160】: Reset to the 60Hz factory setting

➢ When a Parameter lock key number has been entered in parameter 13-07 this key number must be entered first before parameter 13-08 can be used.

13-09	Parameter Set Select
Range	【0】: Complete Parameter Set 【1】: Simplified Parameter Set

※Note: When 13-09 is set to 1 the inverter shows the Simplified Parameter Set. To get back to the Complete Parameter Set, F_31 has to be set to 1.

Chapter 5 Troubleshooting and maintenance

5.1 Error display and corrective action

5.1.1 Manual Reset and Auto-Reset

Faults which can not be recovered manually			
Display	**content**	**Cause**	**Corrective action**
-oV- -oU-	Voltage too high when stopped	Detection circuit malfunction	Consult with the supplier
-LV- -LU-	Voltage too low when stopped	1. Power voltage too low 2. Blown fuse 3. Detection circuit malfunction	1. Check if the power voltage is correct 2. Check fuse 3. Consult with the supplier
-oH- -oH-	The inverter is overheated when stopped	1. Ambient temperature too high or bad ventilation 2. Detection circuit malfunction	1. Improve the ventilation Conditions 2. Consult with the supplier
-oHC-	The inverter is overheated while running	1. Ambient temperature too high or bad ventilation 2. Detection circuit malfunction	1. Improve the ventilation Conditions 2. Consult with the supplier
CtEr CtEr	Current Sensor detection error	Current sensor error or circuit malfunction	Consult with the supplier
EPr EPr	EEPROM problem	Faulty EEPROM	Consult with the supplier
Cot Cot	Communication error	Communications disruption	Check the wiring
Faults which can be recovered manually and automatically			
Display	**content**	**Cause**	**Corrective action**
oC-A oC-A	Over-current at acceleration	1. Acceleration time too short 2. The capacity of the motor exceeds the capacity of the inverter 3. Short circuit between the motor coil and the case 4. Short circuit between motor wiring and ground 5. IGBT module damaged	1. Set a longer acceleration time 2. Replace inverter with one that has the same rating as that of the motor 3. Check the motor 4. Check the wiring 5. Consult with the supplier
oC-C oC-C	Over-current at fixed speed	1. Transient load change 2. Transient power change	1. Increase the capacity of the inverter 2. Install inductor on the power supply input side
oC-d oC-d	Over-current at deceleration	The preset deceleration time is too short.	Set a longer deceleration time

oC-S oC-S	Over current at start	1 .Short circuit between the motor coil and the case 2. Short circuit between motor coil and ground 3. IGBT module damaged	1. Inspect the motor 2. Inspect the wiring 3. Consult with the supplier
oV-C oU-C	Excessive Voltage during operation/ deceleration	1. Deceleration time setting too short or excessive load inertia 2. Power voltage varies widely (fluctuates)	1. Set a longer deceleration time 2. Consider use of a reactor at the power input side
PF PF	Input phase Loss	Abnormal fluctuations in the main circuit voltage	1. Check the main circuit power supply wiring. 2. Check the power supply voltage
Faults which can be recovered manually but not automatically			
Display	**content**	**Cause**	**Corrective action**
oC oC	Over-current during stop	Detection circuit malfunction	Consult with the supplier
oL1 oL1	Motor overload	loading too large	Consider increasing the Motor capacity
oL2 oL2	Inverter overload	Excessive Load	Consider increasing the inverter capacity
LV-C LU-C	Voltage too low during operation	1. Power voltage too low 2. Power voltage varies widely (fluctuates)	1 .Improve power quality 2. Consider adding a reactor at the power input side

5.1.2 Keypad Operation Error Instruction

Display	content	Cause	Corrective action
LoC LoC	1. Parameter already locked 2. Motor direction locked 3. Parameter password (13-07) enabled	1. Attempt to modify frequency parameter while 13-06 > 0. 2. Attempt to reverse direction when 11-00 = 1. 3. Parameter (13-07) enabled, set the correct password will show LOC.	1. Adjust 13-06 2. Adjust 11-00
Err1 Err1	Keypad operation error	1. Press ▲ or ▼while 00-05 / 00-06 > 0 or running at preset speed. 2. Attempt to modify the Parameter.Can not be modified during operation (refer to the parameter list)	1. The ▲ or▼ is available for modifying the parameter only when 00-05 / 00-06 = 0 2. Modify the parameter in STOP mode.
Err2 Err2	Parameter setting error	1. 00-13 is within the range of (11-08 ± 11-11) or (11-09 ± 11-11) or (11-10 ± 11-11) 2. 00-12 ≦ 00-13	1.Modify 11-08 ~ 11-10 or 11-11. Set 00-12 > 00-13

Err5 Err5	Modification of parameter is not available in communication	1. Control command sent during communication. 2. Attempt to modify the function 09-02 ~ 09-05 during communication	1. Issue enable command before communication 2. Set parameters 09-02 ~ 09-05 function before communication
Err6 Err6	Communication failed	1. Wiring error 2. Communication parameter setting error. 3. Incorrect communication protocol	1. Check hardware and wiring 2. Check Functions (09-00 ~ 09-05).
Err7 Err7	Parameter conflict	1. Attempt to modify the function 13-00/13-08. 2. Voltage and current detection circuit is abnormal.	If reset is not possible, please consult with the supplier.

5.1.3 Special conditions

Display	Fault	Description
StP0 StP0	Zero speed at stop	Occurs when preset frequency < 0.1Hz
StP1 StP1	Fail to start directly On power up.	1. If the inverter is set for external terminal control mode (00-02 / 00-03 = 1) and direct start is disabled (07-04 = 1) 2. The inverter cannot be started and will flash STP1. 3. The run input is active at power-up, refer to descriptions of (07-04).
StP2 StP2	Keypad Stop Operated when inverter in external Control mode.	1. If the Stop key is pressed while the inverter is set to external control mode (00-02 / 00-03 =1) then “STP2” flashes after stop. 2. Release and re-activate the run contact to restart the inverter.
E.S. E.S.	External Rapid stop	When external rapid stop input is activated the inverter will decelerate to stop and the display will flash with E.S. message.
b.b. b.b.	External base block	When external base block input is activated the inverter stops immediately and then the display will flash with b.b. message.
PdEr PdEr	PID feedback loss	PID feedback loss is detected.

5.2 General troubleshooting

Status	Checking point	Remedy
Motor runs in wrong direction	Is the wiring for the output terminals correct?	Wiring must match U, V, and W terminals of the motor.
	Is the wiring for forward and reverse signals correct?	Check for correct wiring.
The motor speed can not be regulated.	Is the wiring for the analog frequency inputs correct?	Check for correct wiring.
	Is the setting of operation mode correct?	Check Frequency Source in Par. 00-05 / 00-06.
	Is the load too excessive?	Reduce the load.
Motor running speed too high or too low	Check the motor specifications (poles, voltage) correct?	Confirm the motor specifications.
	Is the gear ratio correct?	Confirm the gear ratio.
	Is the setting of the highest output frequency correct?	Confirm the highest output frequency
Motor speed varies unusually	Is the load too excessive?	Reduce the load.
	Does the load vary excessively?	1. Minimize the variation of the load. 2. Consider increasing the capacities of the inverter and the motor.
	Is the input power unstable or is there a phase loss ?	Consider adding an AC reactor at the power input side if using single-phase power.
		2. Check wiring if using three-phase power
Motor can not run	Is the power connected to the correct L1, L2, and L3 terminals? Is the charging indicator lit ?	1 Is the power applied? 2. Turn the power OFF and then ON again. 3. Make sure the power voltage is correct. 4. Make sure screws are secured firmly.
	Is there voltage across the output terminals U, V and W?	Turn the power OFF and then ON again.
	Is overload causing the motor to stall?	Reduce the load so the motor will run.
	Are there any abnormalities in the inverter?	See error descriptions to check wiring and correct if necessary.
	Is there a forward or reverse run command ?	
	Has the analog frequency signal been input?	1. Is analog frequency input signal wiring correct? 2. Is voltage of frequency input correct?
	Is the operation mode setting correct?	Operate through the digital keypad

5.3 Routine and periodic inspection

To ensure stable and safe operations, check and maintain the inverter at regular intervals.
Use the checklist below to carry out inspection.
Disconnect power after approximately 5 minutes to make sure no voltage is present on the output terminals before any inspection or maintenance.

Items	Details	Checking period		Methods	Criteria	Remedies
		Daily	1Year			
Environment & Ground connection						
Ambient conditions at the installation	Confirm the temperature and humidity at the machine	◎		Measure with thermometer and hygrometer	Temperature: -10 ~ 40° C (14 ~ 120° F) Humidity: Below 95% RH	Improve the ambient or relocate the drive to a better area.
Installation Grounding	Is the grounding resistance correct?		◎	Measure the resistance with a multi-tester	200 V class: below 100 Ω	Improve the grounding if needed.
Terminals & Wiring						
Connection terminals	Any loose parts or terminals?		◎	Visual check Check with a screwdriver	Correct installation requirement	Secure terminals and remove rust
	Any damage to the base ?		◎			
	Any corroded Terminals?		◎			
Wiring	Any broken wires?		◎	Visual check	Correct wiring requirement	Rectify as necessary
	Any damage to the wire insulation?		◎			
voltage						
Input power voltage	Is the voltage of the main circuit correct?	◎		Measure the voltage with a multi-tester	Voltage must conform with the spec.	Improve input voltage if necessary.
Circuit boards and components						
Printed circuit board	Any contamination or damage to printed circuit board?		◎	Visual check	Correct component condition	Clean or replace the circuit board
Power component	Any dust or debris		◎			Clean components
	Check resistance between terminals		◎	Measure with a multi-tester	No short circuit or broken circuit in three phase output	Consult with the supplier
Cooling System						
Cooling fan	Unusual vibration and noise?		◎	Visual and sound check	Correct cooling	Consult with the supplier
	Excessive dust or debris	◎		Visual check		Clean the fan
Heat sink	Excessive dust or debris	◎				Clean up debris or dust
Ventilation Path	Is the ventilation path blocked?	◎				Clear the path

5.4 Maintenance

To ensure long-term reliability, follow the instructions below to perform regular inspection. Turn the power off and wait for a minimum of 5 minutes before inspection to avoid potential shock hazard from the charge stored in high-capacity capacitors.

1. Maintenance Check List.

➢ Ensure that temperature and humidity around the inverters is as required in the instruction manual, installed away from any sources of heat and the correct ventilation is provided.
➢ For replacement of a failed or damaged inverter consult with the local supplier.
➢ Ensure that the installation area is free from dust and any other contamination.
➢ Check and ensure that the ground connections are secure and correct.
➢ Terminal screws must be tight, especially on the power input and output of the inverter.
➢ Do not perform any insulation test on the control circuit.

2. Insulation test Method .

Single Phase

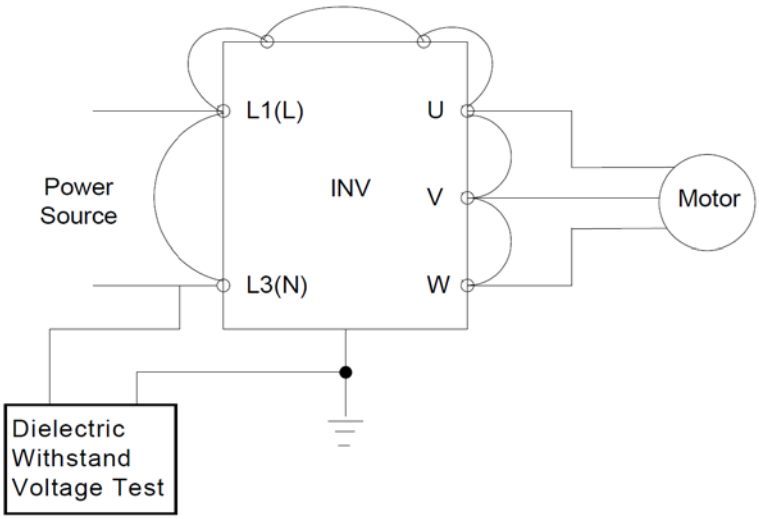

Chapter 6 Peripherals Components

6.1 Reactor Specifications

Model: S2U230S-☐ ☐ F	Specification	
	Current (A)	Inductance (mH)
02	3.0	7.0
03	5.2	4.2
07	9.4	2.1
11	19.0	1.1
13	25.0	0.71

6.2 Fuse Specification

Model: S2U230S-☐ ☐ F	HP	kW	Rating
02	0.25	0.2	10A , 300VAC
03	0.5	0.4	10A , 300VAC
07	1	0.75	20A , 300VAC
11	2	1.5	30A , 300VAC
13	3	2.2	30A , 300VAC

6.3 Fuse Specification(UL Model Recommended)

Model: S2U230S-☐ ☐ F	Manufacture	Type	Rating
02	Bussmann	10CT	10A, 690VAC
03	Bussmann	10CT/16CT	10A/16A, 690VAC
07	Bussmann	16CT/20CT	16A/20A, 690VAC
11	Bussmann	30FE	30A, 690VAC
13	Bussmann	50FE	50A, 690VAC

Appendix S2U Parameter Setting Lists

Customer		Inverter Model	
Using Site		Contact Phone	
Address			

Parameter Code	Setting Content	Parameter Code	Setting Content	Parameter Code	Setting Content	Parameter Code	Setting Content
00-00		03-04		05-17		07-01	
00-01		03-05		05-18		07-02	
00-02		03-06		05-19		07-03	
00-03		03-07		05-20		07-04	
00-04		03-08		05-21		07-05	
00-05		03-09		05-22		07-06	
00-06		03-10		05-23		07-07	
00-07		03-11		05-24		07-08	
00-08		03-12		05-25		08-00	
00-09		03-13		05-26		08-01	
00-10		03-14		05-27		08-02	
00-11		03-15		05-28		08-03	
00-12		03-16		05-29		08-04	
00-13		03-17		05-30		08-05	
00-14		03-18		05-31		08-06	
00-15		03-19		05-32		08-07	
00-16		04-00		06-00		08-08	
00-17		04-01		06-01		08-09	
00-18		04-02		06-02		09-00	
00-19		04-03		06-03		09-01	
00-20		04-04		06-04		09-02	
01-00		04-05		06-05		09-03	
01-01		04-06		06-06		09-04	
01-02		04-07		06-07		09-05	
01-03		04-08		06-16		09-06	
01-04		04-09		06-17		09-07	
01-05		04-10		06-18		09-08	
01-06		04-11		06-19		09-09	
01-07		04-12		06-20		10-00	
01-08		04-13		06-21		10-01	
01-09		04-14		06-22		10-02	
01-10		04-15		06-23		10-03	
01-11		05-00		06-32		10-04	
02-00		05-01		06-33		10-05	
02-01		05-02		06-34		10-06	
02-02		05-03		06-35		10-07	
02-03		05-04		06-36		10-08	
03-00		05-05		06-37		10-09	
03-01		05-06		06-38		10-10	
03-02		05-07		06-39		10-11	
03-03		05-08		07-00		10-12	

Parameter Code	Setting Content	Parameter Code	Setting Content	Parameter Code	Setting Content	Parameter Code	Setting Content
10-13		11-02		12-03		13-09	
10-14		11-03		12-04			
10-15		11-04		12-05			
10-16		11-05		13-00			
10-17		11-06		13-01			
10-18		11-07		13-02			
10-19		11-08		13-03			
10-20		11-09		13-04			
10-21		11-11		13-05			
10-22		12-00		13-06			
11-00		12-01		13-07			
11-01		12-02		13-08			

Simplified Parameter Set List

Parameter Code	Setting Content	Parameter Code	Setting Content	Parameter Code	Setting Content	Parameter Code	Setting Content
F_1		F_10		F_19		F_28	
F_2		F_11		F_20		F_29	
F_3		F_12		F_21		F_30	
F_4		F_13		F_22		F_31	
F_5		F_14		F_23			
F_6		F_15		F_24			
F_7		F_16		F_25			
F_8		F_17		F_26			
F_9		F_18		F_27			

Bonfiglioli worldwide network.

Bonfiglioli Australia
2, Cox Place Glendenning NSW 2761
Locked Bag 1000 Plumpton NSW 2761
Tel. (+ 61) 2 8811 8000 - Fax (+ 61) 2 9675 6605
www.bonfiglioli.com.au - sales@bonfiglioli.com.au

Bonfiglioli Brazil
Travessa Cláudio Armando 171 - Bloco 3
CEP 09861-730 - Bairro Assunção
São Bernardo do Campo - São Paulo
Tel. (+55) 11 4344 1900 - Fax (+55) 11 4344 1906
www.bonfigliolidobrasil.com.br
bonfigliolidobrasil@bonfiglioli.com

Bonfiglioli Canada
2-7941 Jane Street - Concord, Ontario L4K 4L6
Tel. (+1) 905 7384466 - Fax (+1) 905 7389833
www.bonfigliolicanada.com
sales@bonfigliolicanada.com

Bonfiglioli China
19D, No. 360 Pu Dong Nan Road
New Shanghai International Tower
200120 Shanghai
Tel. (+86) 21 5054 3357 - Fax (+86) 21 5970 2957
www.bonfiglioli.cn - bdssales@bonfiglioli.com.cn

Bonfiglioli Deutschland
Sperberweg 12 - 41468 Neuss
Tel. (+49) 02131 2988-0
Fax (+49) 02131 2988-100
www.bonfiglioli.de - info@bonfiglioli.de

Bonfiglioli España
TECNOTRANS BONFIGLIOLI S.A.
Pol. Ind. Zona Franca sector C, calle F, n°6
08040 Barcelona
Tel. (+34) 93 4478400 - Fax (+34) 93 3360402
www.tecnotrans.com - tecnotrans@tecnotrans.com

Bonfiglioli France
14 Rue Eugène Pottier BP 19
Zone Industrielle de Moimont II
95670 Marly la Ville
Tel. (+33) 1 34474510 - Fax (+33) 1 34688800
www.bonfiglioli.fr - btf@bonfiglioli.fr

Bonfiglioli India
PLOT AC7-AC11 Sidco Industrial Estate
Thirumudivakkam - Chennai 600 044
Tel. +91(0) 44 24781035 - 24781036 - 24781037
Fax +91(0) 44 24780091 - 24781904
www.bonfiglioliindia.com - bonfig@vsnl.com

Bonfiglioli Italia
Via Sandro Pertini lotto 7b
20080 Carpiano (Milano)
Tel. (+39) 02 985081 - Fax (+39) 02 985085817
www.bonfiglioli.it
customerservice.italia@bonfiglioli.it

Bonfiglioli New Zealand
88 Hastie Avenue, Mangere Bridge, Auckland
2022, New Zealand - PO Box 11795, Ellerslie
Tel. (+64) 09 634 6441 - Fax (+64) 09 634 6445
npollington@bonfiglioli.com.au

Bonfiglioli Österreich
Molkereistr 4 - A-2700 Wiener Neustadt
Tel. (+43) 02622 22400 - Fax (+43) 02622 22386
www.bonfiglioli.at
info@bonfiglioli.at

Bonfiglioli South East Asia
No 21 Woodlands indusrial park E1
#02-03 Singapore 757720
Tel. (+65) 6893 6346/7 - Fax (+65) 6893 6342
www.bonfiglioli.com.au
sales@bonfiglioli.com.sg

Bonfiglioli South Africa
55 Galaxy Avenue,
Linbro Business Park - Sandton
Tel. (+27) 11 608 2030 OR - Fax (+27) 11 608 2631
www.bonfiglioli.co.za
bonfigsales@bonfiglioli.co.za

Bonfiglioli Türkiye
Atatürk Organíze Sanayi Bölgesi,
10015 Sk. No: 17, Çigli - Izmir
Tel. +90 (0) 232 328 22 77 (pbx)
Fax +90 (0) 232 328 04 14
www.bonfiglioli.com.tr
info@bonfiglioli.com.tr

Bonfiglioli United Kingdom
Industrial Solutions
Unit 7, Colemeadow Road
North Moons Moat - Redditch,
Worcestershire B98 9PB
Tel. (+44) 1527 65022 - Fax (+44) 1527 61995
www.bonfiglioli.com
uksales@bonfiglioli.com
Mobile Solutions
3 - 7 Grosvenor Grange, Woolston
Warrington - Cheshire WA1 4SF
Tel. (+44) 1925 852667 - Fax (+44) 1925 852668
www.bonfiglioli.co.uk
mobilesales@bonfiglioli.co.uk

Bonfiglioli USA
3541 Hargrave Drive Hebron, Kentucky 41048
Tel. (+1) 859 334 3333 - Fax (+1) 859 334 8888
www.bonfiglioliusa.com

Bonfiglioli Vietnam
Lot C-9D-CN My Phuoc Industrial Park 3
Ben Cat - Binh Duong Province
Tel. (+84) 650 3577411 - Fax (+84) 650 3577422
www.bonfiglioli.vn
salesvn@bonfiglioli.com

Bonfiglioli has been designing and developing innovative and reliable power transmission and control solutions for industry, mobile machinery and renewable energy applications since 1956.

www.bonfiglioli.com

Bonfiglioli Riduttori S.p.A.
Via Giovanni XXIII, 7/A
40012 Lippo di Calderara di Reno
Bologna, Italy

tel: +39 051 647 3111
fax: +39 051 647 3126
bonfiglioli@bonfiglioli.com
www.bonfiglioli.com

VEC 1060 R0