Weforma

Deceleration cylinder

WM-Z 0,6

Deceleration Technology

2D / 3D CAD
Download

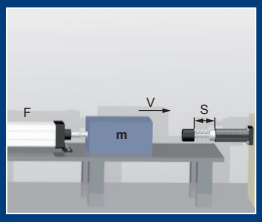

www.weforma.com

04.10.2019

Benefits

Mounting:
- Vertical with the piston rod down

Surface protection:
- Housing: Zinc Plated

Design:
- Flexibility relating to Stroke, Deceleration Characteristic

Temperature:
- Standard: -20°C - +80°C

RoHS - conform:
- Directive 2002/95/EC

Extended Life Time:
- Special Seals + Oils
- Piston rod hard-chrome plated

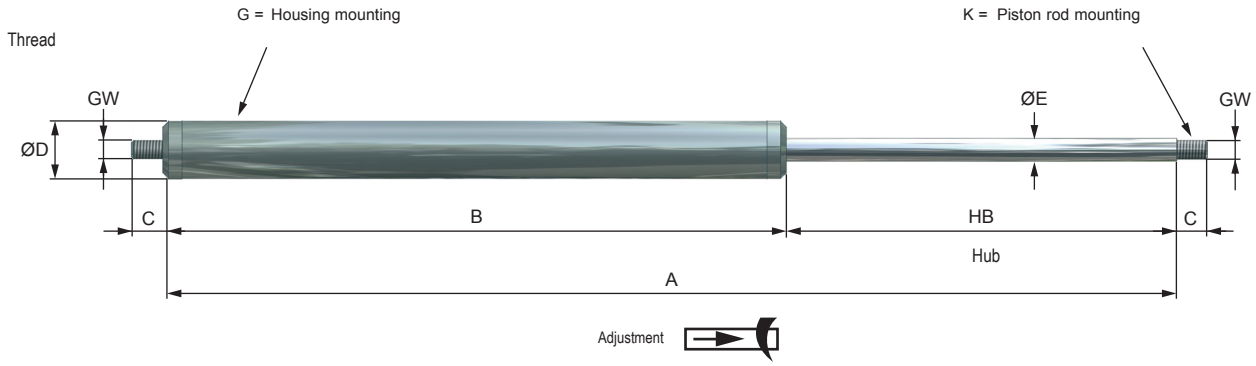

20% of the stroke without deceleration for the standard models (WM-Z).

PERFORMANCE

	Stroke	Max. compression force	Standard version Z						Weight	Weight
			A	B	C	ø D	ø E	GW	(Z)	(ZG)
	mm	N	mm	mm	mm	mm	mm		g	g
WM-Z 0,6-10	10	150	51	41	5	10	3	M 3,5	25	30
WM-Z 0,6-20	20	150	71	51	5	10	3	M 3,5	30	35
WM-Z 0,6-30	30	150	91	61	5	10	3	M 3,5	35	40
WM-Z 0,6-40	40	150	113	73	5	10	3	M 3,5	41	46
WM-Z 0,6-50	50	150	135	85	5	10	3	M 3,5	47	52
WM-Z 0,6-60	60	150	156	96	5	10	3	M 3,5	53	58
WM-Z 0,6-70	70	150	178	108	5	10	3	M 3,5	58	63
WM-Z 0,6-80	80	150	200	120	5	10	3	M 3,5	64	69

Weforma

1 Male rod clevis

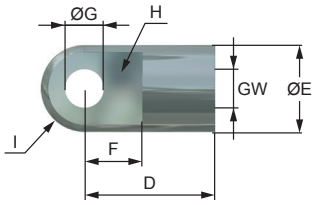

GW*	D	ØE	F	G	H	I	J	SW
	mm	mm	mm	mm	mm	mm	mm	mm
M 3,5	12	8	8	4,1	4	4	-	-

2 Angle joint (DIN 71802)

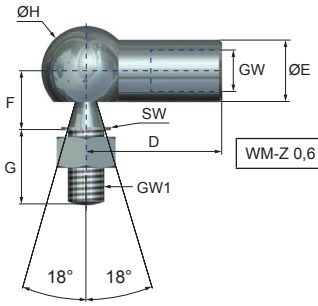

Force	
WM-Z 0,6 / 0,8	250 N

GW*	GW1*	D	ØE	F	G	H	I	J	SW
		mm	mm	mm	mm	mm	mm	mm	mm
M 3,5	M4	22	8	9	10,2	13	-	-	7

3 Female rod clevis (DIN 71752)

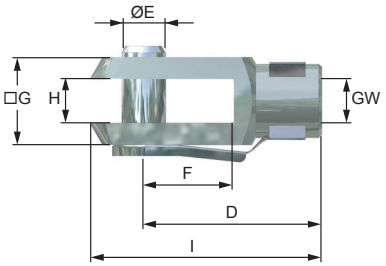

GW*	D	ØE	F	G	H	I	J	SW
	mm	mm	mm	mm	mm	mm	mm	mm
M 3,5	16	4	8	8	4	21	-	-

4 Spherical end bearing

(DIN 648, Series K,
Series E on enquiry)

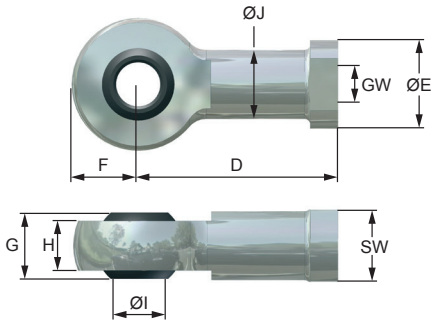

GW*	D	ØE	F	G	H	I	J	SW
	mm	mm	mm	mm	mm	mm	mm	mm
M 3,5	21	6,5	7	6	4,5	3	5	5,5

Ordering Information	
WM-Z 0,6-050-K3G4-C	
WM	**Weforma**
Z	Deceleration cylinder (Standard)
0,6	Diameter: 10 mm
050	Stroke: 50 mm
K3	Piston rod mounting: female rod clevis
G4	Housing mounting: spherical end bearing
C	Typ of deceleration : A= Push, B= Pull, C= Push and Pull

Weforma

Important information

General Information

Shock absorber, deceleration cylinders and speed controls may under no circumstances be welded, painted or provided with clamps.

The products must be protected against contamination, fluids and air pressure. We offer special solutions for these applications. deceleration cylinder should be assembled only with the fixture indicated in the catalogue. When deceleration cylinders are used parallel the size of the model and the used degree of hardness / used adjustment has to be the same. The load has to be distributed equally. Upon the occurrence of vibrations and oscillation a written release by Weforma is required. A fixed stop must be set in the end positions 1 - 1,5 mm before the end of the stroke. 20% of the stroke without deceleration for the WM-Z series.

Mounting: WM-Z vertical,
Deviation: +/-30 from the axis

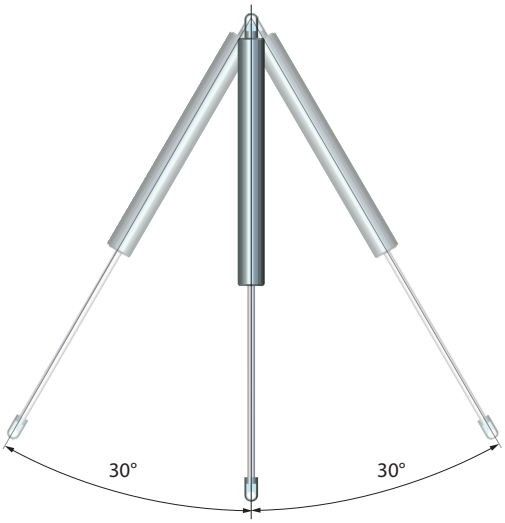

Adjustment:

Fixation of the piston rod in the
extended position adjustment of the deceleration by turning the piston rod clockwise / counter clockwise
soft deceleration = rotating counter-clockwise
hard deceleration = rotating clockwise
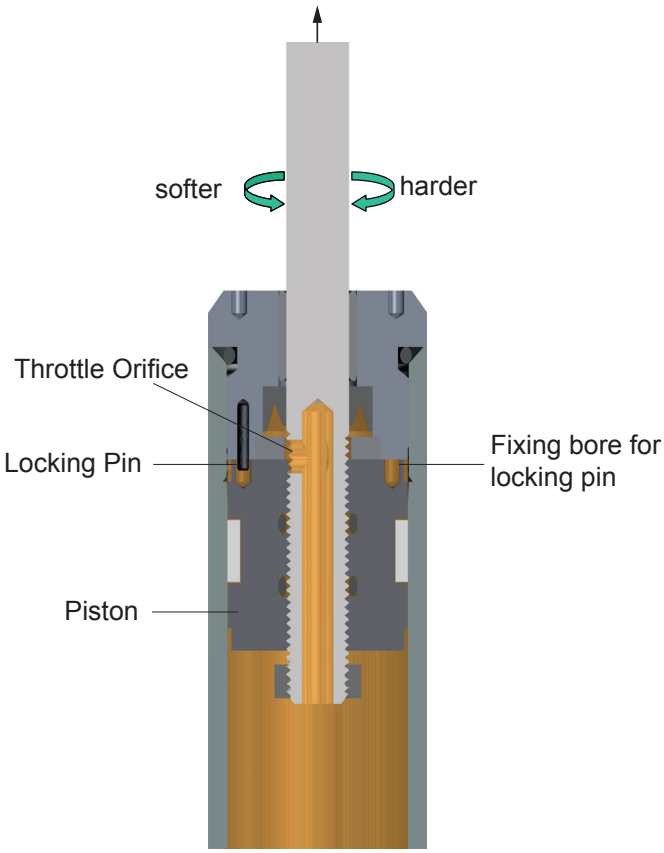
Further hardness grades: on enquiry